FMTX Male stud connector

Triple-Lok® 37° Flare end / Male NPTF* thread (SAE 476)
SAE 070102 MS51500
*Stainless Steel = NPT to prevent galling

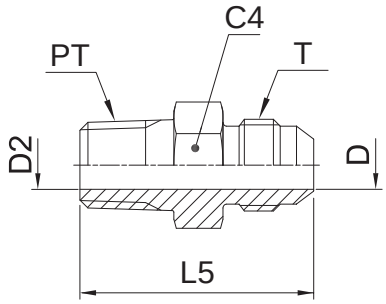

Tube O.D. mm	Tube O.D. in.	Thread NPT/NPTF PT	Thread UN/UNF-2A T	C4 mm	D mm	D2 mm	L5 mm	Weight (steel) g/1 piece	Triple-Lok® Steel	Triple-Lok® Stainless Steel	PN (bar) S	PN (bar) SS
	1/8	1/8-27	5/16-24	11.0	1.6	4.7	28.0	10	**2 FTX-S**		420	—
5	3/16	1/8-27	3/8-24	11.0	3.0	3.0	29.0	12	**3 FTX-S**		420	—
6	1/4	1/8-27	7/16-20	13.0	4.4	4.4	31.0	14	**4FMTXS**	**4FMTXSS**	420	350
6	1/4	1/4-18	7/16-20	14.0	4.4	4.4	36.0	26	**4-4FMTXS**	**4-4FMTXSS**	420	350
6	1/4	3/8-18	7/16-20	19.0	4.4	4.4	36.5	26	**4-6 FTX-S**	**4-6FMTXSS**	420	350
6	1/4	1/2-14	7/16-20	22.3	4.4	4.4	43.0	26	**4-8 FTX-S**	**4-8FMTXSS**	420	350
8	5/16	1/8-27	1/2-20	14.0	6.0	5.0	31.0	17	**5FMTXS**	**5FMTXSS**	420	350
8	5/16	1/4-18	1/2-20	14.0	6.0	6.0	36.0	25	**5-4FMTXS**	**5-4FMTXSS**	420	350
8	5/16	3/8-18	1/2-20	19.0	6.0	6.0	36.0	30	**5-6FMTXS**	**5-6FMTXSS**	420	350
10	3/8	1/4-18	9/16-18	17.0	7.5	7.5	36.5	25	**6FMTXS**	**6FMTXSS**	420	350
10	3/8	1/8-27	9/16-18	16.0	7.5	4.7	31.5	21	**6-2 FTX-S**	**6-2FMTXSS**	420	350
10	3/8	3/8-18	9/16-18	19.0	7.5	7.5	36.5	39	**6-6FMTXS**	**6-6FMTXSS**	420	350
10	3/8	1/2-14	9/16-18	22.0	7.5	7.5	43.0	47	**6-8FMTXS**	**6-8FMTXSS**	420	350
10	3/8	3/4-14	9/16-18	28.6	7.5	15.5	42.0	109	**6-12 FTX-S**	**6-12FMTXSS**	420	350
12	1/2	3/8-18	3/4-16	19.0	9.9	9.9	39.0	45	**8FMTXS**	**8FMTXSS**	420	350
12	1/2	1/4-18	3/4-16	19.0	9.9	7.0	39.0	42	**8-4FMTXS**	**8-4FMTXSS**	420	350
12	1/2	1/2-14	3/4-16	22.0	9.9	9.9	45.5	74	**8-8FMTXS**	**8-8FMTXSS**	420	350
12	1/2	3/4-14	3/4-16	27.0	9.9	9.9	47.0	121	**8-12FMTXS**	**8-12FMTXSS**	380	350
14, 15, 16	5/8	1/2-14	7/8-14	24.0	12.3	12.3	48.0	77	**10FMTXS**	**10FMTXSS**	350	350
14, 15, 16	5/8	3/8-18	7/8-14	24.0	12.3	10.0	43.0	63	**10-6FMTXS**	**10-6FMTXSS**	350	350
14, 15, 16	5/8	3/4-14	7/8-14	27.0	12.3	12.3	49.5	122	**10-12FMTXS**	**10-12FMTXSS**	350	350
18, 20	3/4	3/4-14	1 1/16-12	27.0	15.5	15.5	53.0	123	**12FMTX-S**	**12FMTXSS**	350	350
18, 20	3/4	3/8-18	1 1/16-12	28.5	15.5	10.3	47.5	90	**12-6 FTX-S**	**12-6FMTXSS**	350	350
18, 20	3/4	1/2-14	1 1/16-12	28.5	15.5	13.5	52.0	103	**12-8 FTX-S**	**12-8FMTXSS**	350	350
18, 20	3/4	1-11.5	1 1/16-12	35.0	15.5	15.5	57.0	176	**12-16 FTX-S**	**12-16FMTXSS**	310	280
22	7/8	3/4-14	1 3/16-12	31.7	18.3	18.3	53.0	137	**14 FTX-S**	**14FMTXSS**	280	245
25	1	1-11.5	1 5/16-12	36.0	21.5	21.5	58.5	189	**16FMTXS**	**16FMTXSS**	280	280
25	1	1/2-14	1 5/16-12	36.0	21.5	18.0	53.5	110	**16-8 FTX-S**	**16-8FMTXSS**	280	280
25	1	3/4-14	1 5/16-12	36.0	21.5	18.0	53.5	149	**16-12FMTXS**	**16-12FMTXSS**	280	280
25	1	1 1/4-11.5	1 5/16-12	47.6	21.4	21.4	54.0	331	**16-20 FTX-S**	**16-20FMTXSS**	280	280
28, 30, 32	1 1/4	1 1/4-11.5	1 5/8-12	46.0	27.5	32.0	62.0	315	**20FMTXS**	**20FMTXSS**	210	210
28, 30, 32	1 1/4	1-11.5	1 5/8-12	43.0	27.5	23.8	61.5	248	**20-16 FTX-S**	**20-16FMTXSS**	280	210
35, 38	1 1/2	1 1/2-11.5	1 7/8-12	50.0	33.0	38.0	68.0	430	**24FMTXS**	**24FMTXSS**	210	140
35, 38	1 1/2	1-11.5	1 7/8-12	51.0	33.3	24.0	66.5	310	**24-16 FTX-S**	**24-16FMTXSS**	210	140
35, 38	1 1/2	1 1/4-11.5	1 7/8-12	51.0	33.3	31.7	67.5	359	**24-20 FTX-S**	**24-20FMTXSS**	210	140
35, 38	1 1/2	2-11.5	1 7/8-12	66.7	33.3	33.3	72.5	720	**24-32 FTX-S**	**24-32FMTXSS**	140	140
	2	2-11.5	2 1/2-12	66.7	45.2	45.2	79.0	858	**32 FTX-S**	**32FMTXSS**	140	105
	2	1 1/2-11.5	2 1/2-12	66.7	45.2	38.0	78.0	720	**32-24 FTX-S**	**32-24FMTXSS**	140	105

Order codes shown are part of our current manufacturing programme.
Imperial and metric parts may vary in hexagon dimensions.

$\frac{\text{PN (bar)}}{10}$ = PN (MPa)

Pressure ratings – PN shown, apply to Steel and Stainless Steel versions of the product.
For Brass parts reduce pressures by 35%.
Do not create drawings from these dimensions, they are subject to change and ISO manufacturing allowances.