M Nut · EO 24° Cone end

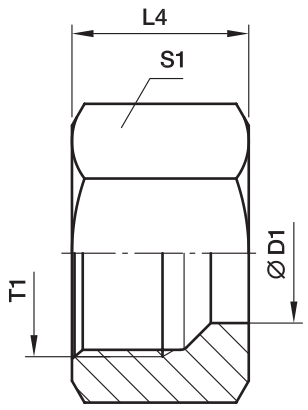

Nut: M

Series	D1	T1	L4	S1	Weight g/1 piece	Order code*	PN (bar)[1] CF	71	MS
LL[2])	04	M 08×1.0	11.0	10	4	**M04LL**	100	100	63
	06	M 10×1.0	11.5	12	6	**M06LL**	100	100	63
	08	M 12×1.0	12.0	14	7	**M08LL**	100	100	63
	10	M 14×1.0	12.5	17	11	**M10LL**	100	100	63
	12	M 16×1.0	13.0	19	13	**M12LL**	100	100	63
L[3])	06	M 12×1.5	14.5	14	10	**M06L**	500	315	200
	08	M 14×1.5	14.5	17	15	**M08L**	500	315	200
	10	M 16×1.5	15.5	19	18	**M10L**	500	315	200
	12	M 18×1.5	15.5	22	25	**M12L**	400	315	200
	15	M 22×1.5	17.0	27	42	**M15L**	400	315	200
	18	M 26×1.5	18.0	32	62	**M18L**	400	315	200
	22	M 30×2.0	20.0	36	82	**M22L**	250	160	100
	28	M 36×2.0	21.0	41	89	**M28L**	250	160	100
	35	M 45×2.0	24.0	50	137	**M35L**	250	160	100
	42	M 52×2.0	24.0	60	216	**M42L**	250	160	100
S[4])	06	M 14×1.5	16.5	17	17	**M06S**	800	630	400
	08	M 16×1.5	16.5	19	20	**M08S**	800	630	400
	10	M 18×1.5	17.5	22	31	**M10S**	800	630	400
	12	M 20×1.5	17.5	24	34	**M12S**	630	630	400
	16	M 24×1.5	20.5	30	66	**M16S**	630	400	250
	20	M 30×2.0	24.0	36	102	**M20S**	420	400	250
	25	M 36×2.0	27.0	46	202	**M25S**	420	400	250
	30	M 42×2.0	29.0	50	219	**M30S**	420	400	250
	38	M 52×2.0	32.5	60	339	**M38S**	420	315	200

[1]) Pressure shown = item deliverable

[2]) LL = very light series; [3]) L = light series; [4]) S = heavy series

$\frac{\text{PN (bar)}}{10}$ = PN (MPa)

*Please add the **suffixes** below according to the material/ surface required.

Order code suffixes		
Material	Suffix surface and material	Example
Steel	CFX	M16SCFX
Stainless Steel	EODURX	M16SEODURX
Brass	MSX	M16SMSX