# GR Straight reducer

EO 24° cone end

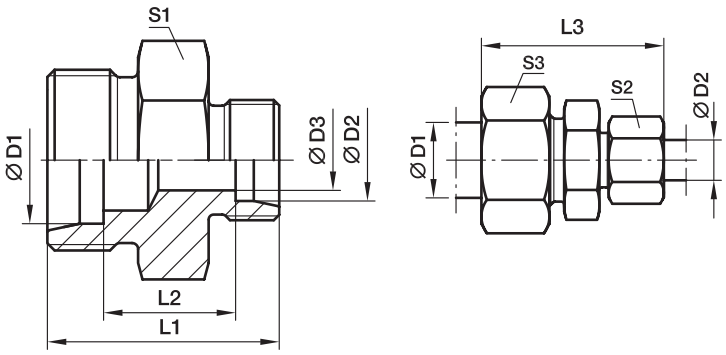


| Series | D1 | D2 | D3 | L1 | L2 | L3 | S1 | S2 | S3 | Weight g/1 piece | Order code* | PN (bar)[1] Steel | 71 | MS |
|---|---|---|---|---|---|---|---|---|---|---|---|---|---|---|
| LL[2]) | 06 | 04 | 3.0 | 20 | 10.5 | 32 | 11 | 10 | 12 | 7 | **GR06/04LL** | 100 | 100 | 63 |
| | 08 | 04 | 3.0 | 22 | 12.5 | 34 | 12 | 10 | 14 | 9 | **GR08/04LL** | 100 | 100 | 63 |
| | 08 | 06 | 4.5 | 22 | 11.0 | 34 | 12 | 12 | 14 | 11 | **GR08/06LL** | 100 | 100 | 63 |
| L[3]) | 08 | 06 | 4.0 | 25 | 11.0 | 40 | 14 | 14 | 17 | 16 | **GR08/06L** | 500 | 315 | 200 |
| | 10 | 06 | 4.0 | 26 | 12.0 | 41 | 17 | 14 | 19 | 21 | **GR10/06L** | 500 | 315 | 200 |
| | 10 | 08 | 6.0 | 26 | 12.0 | 41 | 17 | 17 | 19 | 21 | **GR10/08L** | 500 | 315 | 200 |
| | 12 | 06 | 4.0 | 27 | 13.0 | 42 | 19 | 14 | 22 | 26 | **GR12/06L** | 400 | 315 | 200 |
| | 12 | 08 | 6.0 | 27 | 13.0 | 42 | 19 | 17 | 22 | 26 | **GR12/08L** | 400 | 315 | 200 |
| | 12 | 10 | 8.0 | 28 | 14.0 | 43 | 19 | 19 | 22 | 29 | **GR12/10L** | 400 | 315 | 200 |
| | 15 | 10 | 8.0 | 29 | 15.0 | 45 | 24 | 19 | 27 | 46 | **GR15/10L** | 400 | 315 | 200 |
| | 15 | 12 | 10.0 | 29 | 15.0 | 45 | 24 | 22 | 27 | 45 | **GR15/12L** | 400 | 315 | 200 |
| | 18 | 10 | 8.0 | 30 | 15.5 | 46 | 27 | 19 | 32 | 65 | **GR18/10L** | 400 | 315 | 200 |
| | 18 | 12 | 10.0 | 30 | 15.5 | 46 | 27 | 22 | 32 | 64 | **GR18/12L** | 400 | 315 | 200 |
| | 18 | 15 | 12.0 | 31 | 16.5 | 48 | 27 | 27 | 32 | 65 | **GR18/15L** | 400 | 315 | 200 |
| | 22 | 12 | 10.0 | 32 | 17.5 | 48 | 32 | 22 | 36 | 80 | **GR22/12L** | 250 | 160 | 100 |
| | 22 | 15 | 12.0 | 33 | 18.5 | 50 | 32 | 27 | 36 | 89 | **GR22/15L** | 250 | 160 | 100 |
| | 22 | 18 | 15.0 | 33 | 18.0 | 50 | 32 | 32 | 36 | 89 | **GR22/18L** | 250 | 160 | 100 |
| | 28 | 18 | 15.0 | 34 | 19.0 | 52 | 41 | 32 | 41 | 142 | **GR28/18L** | 250 | 160 | 100 |
| | 28 | 22 | 19.0 | 36 | 21.0 | 54 | 41 | 36 | 41 | 139 | **GR28/22L** | 250 | 160 | 100 |
| | 35 | 22 | 19.0 | 39 | 21.0 | 59 | 46 | 36 | 50 | 202 | **GR35/22L** | 250 | 160 | 100 |
| | 35 | 28 | 24.0 | 39 | 21.0 | 59 | 46 | 41 | 50 | 206 | **GR35/28L** | 250 | 160 | 100 |
| | 42 | 35 | 30.0 | 43 | 21.5 | 66 | 55 | 50 | 60 | 330 | **GR42/35L** | 250 | 160 | 100 |
| S[4]) | 08 | 06 | 4.0 | 32 | 18.0 | 47 | 17 | 17 | 19 | 35 | **GR08/06S** | 800 | 630 | 400 |
| | 10 | 06 | 4.0 | 32 | 17.5 | 48 | 19 | 17 | 22 | 41 | **GR10/06S** | 800 | 630 | 400 |
| | 10 | 08 | 5.0 | 32 | 17.5 | 48 | 19 | 19 | 22 | 42 | **GR10/08S** | 800 | 630 | 400 |
| | 12 | 06 | 4.0 | 34 | 19.5 | 50 | 22 | 17 | 24 | 56 | **GR12/06S** | 630 | 630 | 400 |
| | 12 | 08 | 5.0 | 34 | 19.5 | 50 | 22 | 19 | 24 | 57 | **GR12/08S** | 630 | 630 | 400 |
| | 12 | 10 | 7.0 | 34 | 19.0 | 51 | 22 | 22 | 24 | 59 | **GR12/10S** | 630 | 630 | 400 |
| | 16 | 10 | 7.0 | 36 | 20.0 | 54 | 27 | 22 | 30 | 80 | **GR16/10S** | 630 | 400 | 250 |
| | 16 | 12 | 8.0 | 36 | 20.0 | 54 | 27 | 24 | 30 | 87 | **GR16/12S** | 630 | 400 | 250 |
| | 16 | 14 | 10.0 | 36 | 21.5 | 57 | 27 | 27 | 30 | 79 | **GR16/14S** | 630 | 400 | 250 |
| | 20 | 10 | 7.0 | 40 | 22.0 | 60 | 32 | 22 | 36 | 129 | **GR20/10S** | 420 | 400 | 250 |
| | 20 | 12 | 8.0 | 40 | 22.0 | 60 | 32 | 24 | 36 | 131 | **GR20/12S** | 420 | 400 | 250 |
| | 20 | 16 | 12.0 | 42 | 23.0 | 63 | 32 | 30 | 36 | 134 | **GR20/16S** | 420 | 400 | 250 |
| | 25 | 16 | 12.0 | 46 | 25.5 | 68 | 41 | 30 | 46 | 236 | **GR25/16S** | 420 | 400 | 250 |
| | 25 | 20 | 16.0 | 48 | 25.5 | 71 | 41 | 36 | 46 | 235 | **GR25/20S** | 420 | 400 | 250 |
| | 30 | 20 | 16.0 | 50 | 26.0 | 74 | 46 | 36 | 50 | 299 | **GR30/20S** | 420 | 400 | 250 |
| | 30 | 25 | 20.0 | 52 | 26.5 | 77 | 46 | 46 | 50 | 317 | **GR30/25S** | 420 | 400 | 250 |
| | 38 | 30 | 25.0 | 59 | 29.5 | 87 | 55 | 50 | 60 | 522 | **GR38/30S** | 420 | 315 | 200 |

[1]) Pressure shown = item deliverable

[2]) LL = very light series; [3]) L = light series; [4]) S = heavy series

$\frac{\text{PN (bar)}}{10}$ = PN (MPa)

**Delivery without nut and ring. Information on ordering complete fittings see page I7.**

*Please add the **suffixes** below according to the material/surface required.

| Order code suffixes | | |
|---|---|---|
| Material | Suffix surface and material | Example |
| Steel | CFX | GR16/12SCFX |
| Stainless Steel | 71X | GR16/12S71X |
| Brass | MSX | GR16/12SMSX |