## W Union elbow

EO 24° cone end

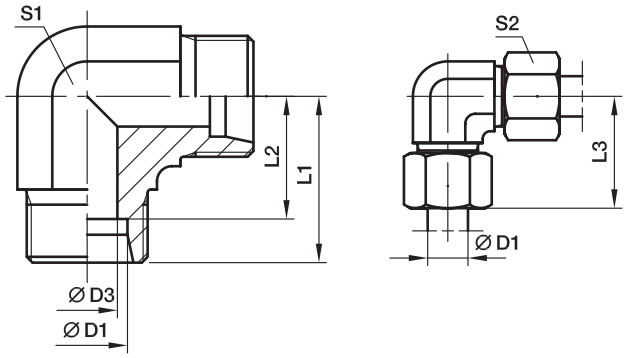


| Series | D1 | D3 | L1 | L2 | L3 | S1 | S2 | Weight g/1 piece | Order code* | PN (bar)[1] Steel | 71 | MS |
|---|---|---|---|---|---|---|---|---|---|---|---|---|
| LL[2]) | 04 | 3.0 | 15 | 11.0 | 21 | 9 | 10 | 13 | **W04LL** | 100 | 100 | 63 |
| | 06 | 4.5 | 15 | 9.5 | 21 | 9 | 12 | 15 | **W06LL** | 100 | 100 | 63 |
| | 08 | 6.0 | 17 | 11.5 | 23 | 12 | 14 | 23 | **W08LL** | 100 | 100 | 63 |
| | 10 | 8.0 | 18 | 12.5 | 24 | 12 | 17 | 32 | **W10LL** | 100 | 100 | 63 |
| | 12 | 10.0 | 19 | 13.0 | 25 | 14 | 19 | 41 | **W12LL** | 100 | 100 | 63 |
| L[3]) | 06 | 4.0 | 19 | 12.0 | 27 | 12 | 14 | 29 | **W06L** | 500 | 315 | 200 |
| | 08 | 6.0 | 21 | 14.0 | 29 | 12 | 17 | 43 | **W08L** | 500 | 315 | 200 |
| | 10 | 8.0 | 22 | 15.0 | 30 | 14 | 19 | 54 | **W10L** | 500 | 315 | 200 |
| | 12 | 10.0 | 24 | 17.0 | 32 | 19 | 22 | 80 | **W12L** | 400 | 315 | 200 |
| | 15 | 12.0 | 28 | 21.0 | 36 | 19 | 27 | 81 | **W15L** | 400 | 315 | 200 |
| | 18 | 15.0 | 31 | 23.5 | 40 | 24 | 32 | 140 | **W18L** | 400 | 315 | 200 |
| | 22 | 19.0 | 35 | 27.5 | 44 | 27 | 36 | 178 | **W22L** | 250 | 160 | 100 |
| | 28 | 24.0 | 38 | 30.5 | 47 | 36 | 41 | 340 | **W28L** | 250 | 160 | 100 |
| | 35 | 30.0 | 45 | 34.5 | 56 | 41 | 50 | 458 | **W35L** | 250 | 160 | 100 |
| | 42 | 36.0 | 51 | 40.0 | 63 | 50 | 60 | 776 | **W42L** | 250 | 160 | 100 |
| S[4]) | 06 | 4.0 | 23 | 16.0 | 31 | 12 | 17 | 52 | **W06S** | 800 | 630 | 400 |
| | 08 | 5.0 | 24 | 17.0 | 32 | 14 | 19 | 74 | **W08S** | 800 | 630 | 400 |
| | 10 | 7.0 | 25 | 17.5 | 34 | 19* | 22 | 97 | **W10S** | 800 | 630 | 400 |
| | 12 | 8.0 | 29 | 21.5 | 38 | 19* | 24 | 137 | **W12S** | 630 | 630 | 400 |
| | 16 | 12.0 | 33 | 24.5 | 43 | 24 | 30 | 162 | **W16S** | 630 | 400 | 250 |
| | 20 | 16.0 | 37 | 26.5 | 48 | 27 | 36 | 221 | **W20S** | 420 | 400 | 250 |
| | 25 | 20.0 | 42 | 30.0 | 54 | 36 | 46 | 424 | **W25S** | 420 | 400 | 250 |
| | 30 | 25.0 | 49 | 35.5 | 62 | 41 | 50 | 603 | **W30S** | 420 | 400 | 250 |
| | 38 | 32.0 | 57 | 41.0 | 72 | 50 | 60 | 1010 | **W38S** | 420 | 315 | 200 |

[1]) Pressure shown = item deliverable

[2]) LL = very light series; [3]) L = light series; [4]) S = heavy series

*S1 = 17 in 1.4571

$\frac{\text{PN (bar)}}{10}$ = PN (MPa)

**Delivery without nut and ring. Information on ordering complete fittings see page I7.**

*Please add the **suffixes** below according to the material/surface required.

| Order code suffixes | | |
|---|---|---|
| Material | Suffix surface and material | Example |
| Steel | CFX | W16SCFX |
| Stainless Steel | 71X | W16S71X |
| Brass | MSX | W16SMSX |