TR Tee Reducer

EO 24° cone end

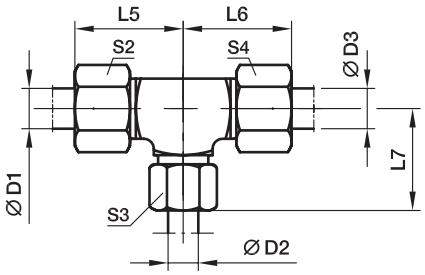

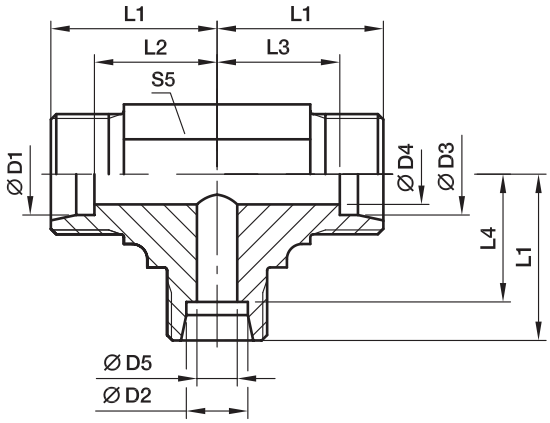

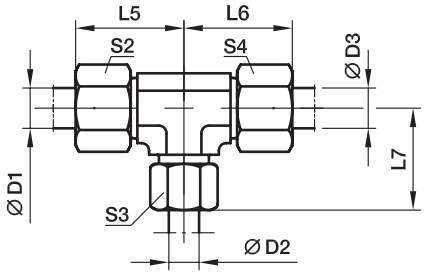

Series	D1	D2	D3	D4	D5	L1	L2	L3	L4	L5	L6	L7	S2	S3	S4	S5	Weight g/1 piece	Order code*	PN (bar)[1] Steel	71	MS
LL[2]	04	08	04	3.0	6	17	13.0	13.0	11.5	23	23	23	10	14	10	12	27	**TR04/08/04LL**	100	100	63
	06	04	06	4.5	3	15	9.5	9.5	11.0	21	21	21	12	10	12	9	18	**TR06/04/06LL**	100	100	63
L[3]	06	08	06	4.0	6	21	14.0	14.0	14.0	29	29	29	14	17	14	12	54	**TR06/08/06L**	500	315	200
	08	06	08	6.0	4	21	14.0	14.0	14.0	29	29	29	17	14	17	12	53	**TR08/06/08L**	500	315	200
	06	10	06	4.0	8	22	15.0	15.0	15.0	30	30	30	14	19	14	14	53	**TR06/10/06L**	500	315	200
	08	10	08	6.0	8	22	15.0	15.0	15.0	30	30	30	17	19	17	14	50	**TR08/10/08L**	500	315	200
	10	06	10	8.0	4	22	15.0	15.0	15.0	30	30	30	19	14	19	14	46	**TR10/06/10L**	500	315	200
	10	08	10	8.0	6	22	15.0	15.0	15.0	30	30	30	19	17	19	14	43	**TR10/08/10L**	500	315	200
	10	10	06	4.0	8	22	15.0	15.0	15.0	30	30	30	19	19	14	14	49	**TR10/10/06L**	500	315	200
	08	12	08	6.0	10	24	17.0	17.0	17.0	32	32	32	17	22	17	17	67	**TR08/12/08L**	400	315	200
	12	06	12	10.0	4	24	17.0	17.0	17.0	32	32	32	22	14	22	17	66	**TR12/06/12L**	400	315	200
	12	08	08	6.0	6	24	17.0	17.0	17.0	32	32	32	22	17	17	17	66	**TR12/08/08L**	400	315	200
	12	08	12	10.0	6	24	17.0	17.0	17.0	32	32	32	22	17	22	17	68	**TR12/08/12L**	400	315	200
	12	10	10	8.0	8	24	17.0	17.0	17.0	32	32	32	22	19	19	17	67	**TR12/10/10L**	400	315	200
	12	10	12	10.0	8	24	17.0	17.0	17.0	32	32	32	22	19	22	17	67	**TR12/10/12L**	400	315	200
	12	12	10	8.0	10	24	17.0	17.0	17.0	32	32	32	22	22	19	17	64	**TR12/12/10L**	400	315	200
	10	15	10	8.0	12	28	21.0	21.0	21.0	36	36	36	19	27	19	19	105	**TR10/15/10L**	400	315	200
	12	15	12	10.0	12	28	21.0	21.0	21.0	36	36	36	22	27	22	19	102	**TR12/15/12L**	400	315	200
	15	06	15	12.0	4	28	21.0	21.0	21.0	36	36	36	27	14	27	19	107	**TR15/06/15L**	400	315	200
	15	10	15	12.0	8	28	21.0	21.0	21.0	36	36	36	27	19	27	19	105	**TR15/10/15L**	400	315	200
	15	12	12	10.0	10	28	21.0	21.0	21.0	36	36	36	27	22	22	19	101	**TR15/12/12L**	400	315	200
	15	12	15	12.0	10	28	21.0	21.0	21.0	36	36	36	27	22	27	19	105	**TR15/12/15L**	400	315	200
	15	15	12	10.0	12	28	21.0	21.0	21.0	36	36	36	27	27	22	19	103	**TR15/15/12L**	400	315	200
	12	18	12	10.0	15	31	24.0	24.0	23.5	39	39	40	22	32	22	24	177	**TR12/18/12L**	400	315	200
	18	10	10	8.0	8	31	23.5	24.0	24.0	40	39	39	32	19	19	24	173	**TR18/10/10L**	400	315	200
	18	10	18	15.0	8	31	23.5	23.5	24.0	40	40	39	32	19	32	24	182	**TR18/10/18L**	400	315	200
	18	12	18	15.0	10	31	23.5	23.5	24.0	40	40	39	32	22	32	24	174	**TR18/12/18L**	400	315	200