K Union cross

EO 24° cone end

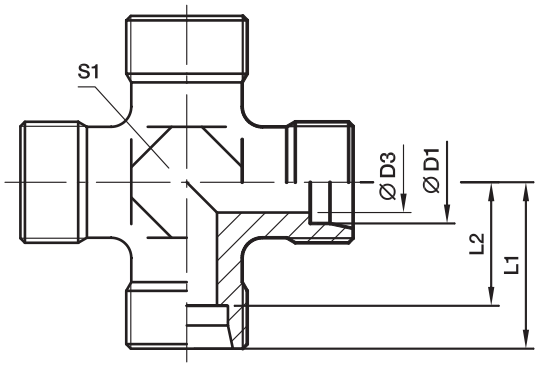

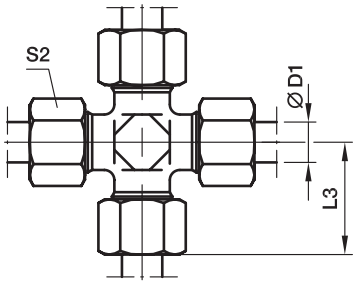

Series	D1	D3	L1	L2	L3	S1	S2	Weight g/1 piece	Order code*	PN (bar)[1] Steel	71	MS
LL[2])	04	3.0	15	11.0	21	9	10	13	**K04LL**	100	100	63
	06	4.5	15	9.5	21	9	12	14	**K06LL**	100	100	63
	08	6.0	17	11.5	23	12	14	24	**K08LL**	100	100	63
L[3])	06	4.0	19	12.0	27	12	14	35	**K06L**	315	315	200
	08	6.0	21	14.0	29	12	17	40	**K08L**	315	315	200
	10	8.0	22	15.0	30	14	19	52	**K10L**	315	315	200
	12	10.0	24	17.0	32	17	22	69	**K12L**	315	315	200
	15	12.0	28	21.0	36	19	27	130	**K15L**	315	315	200
	18	15.0	31	23.5	40	24	32	188	**K18L**	315	315	200
	22	19.0	35	27.5	44	27	36	251	**K22L**	160	160	100
	28	24.0	38	30.5	47	36	41	392	**K28L**	160	160	100
	35	30.0	45	34.5	56	41	50	618	**K35L**	160	160	100
	42	36.0	51	40.0	63	50	60	905	**K42L**	160	160	100
S[4])	06	4.0	23	16.0	31	12	17	58	**K06S**	630	630	400
	08	5.0	24	17.0	32	14	19	82	**K08S**	630	630	400
	10	7.0	25	17.5	34	17	22	97	**K10S**	630	630	400
	12	8.0	29	21.5	38	17	24	146	**K12S**	630	630	400
	16	12.0	33	24.5	43	24	30	220	**K16S**	400	400	250
	20	16.0	37	26.5	48	27	36	339	**K20S**	315	315	200
	25	20.0	42	30.0	54	36	46	576	**K25S**	315	315	200
	30	25.0	49	35.5	62	41	50	843	**K30S**	315	315	200
	38	32.0	57	41.0	72	50	60	1350	**K38S**	315	315	200

[1]) Pressure shown = item deliverable

[2]) LL = very light series; [3]) L = light series; [4]) S = heavy series

$\frac{\text{PN (bar)}}{10}$ = PN (MPa)

Delivery without nut and ring. Information on ordering complete fittings see page I7.

Order code suffixes		
Material	Suffix surface and material	Example
Steel	CFX	K16SCFX
Stainless Steel	71X	K16S71X
Brass	MSX	K16SMSX

*Please add the **suffixes** below according to the material/surface required.