EL Swivel nut run tee

EO 24° cone end / EO 24° DKO swivel

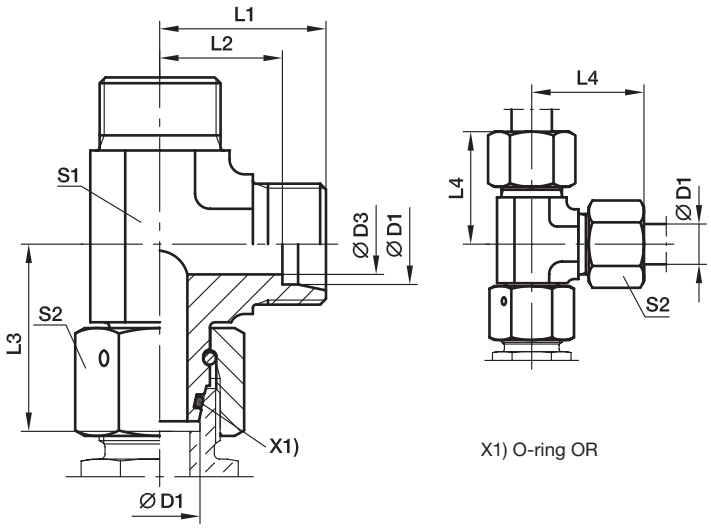

X1) O-ring OR

Series	D1	D3	L1	L2	L3	L4	S1	S2	Weight g/1 piece	Order code*	PN (bar)[1] Steel	71
L[3])	06	4	19	12.0	26.0	27	12	14	44	**EL06LOMD**	500	315
	08	6	21	14.0	27.5	29	12	17	53	**EL08LOMD**	500	315
	10	8	22	15.0	29.0	30	14	19	68	**EL10LOMD**	500	315
	12	10	24	17.0	29.5	32	17	22	95	**EL12LOMD**	400	315
	15	12	28	21.0	32.5	36	19	27	151	**EL15LOMD**	400	315
	18	15	31	23.5	35.5	40	24	32	233	**EL18LOMD**	400	315
	22	19	35	27.5	38.5	44	27	36	309	**EL22LOMD**	250	160
	28	24	38	30.5	41.5	47	36	41	436	**EL28LOMD**	250	160
	35	30	45	34.5	51.0	56	41	50	666	**EL35LOMD**	250	160
	42	36	51	40.0	56.0	63	50	60	1163	**EL42LOMD**	250	160
S[4])	06	4	23	16.0	27.0	31	12	17	65	**EL06SOMD**	800	630
	08	5	24	17.0	27.5	32	14	19	84	**EL08SOMD**	800	630
	10	6	25	17.5	30.0	34	17	22	118	**EL10SOMD**	800	630
	12	8	29	21.5	31.0	38	17	24	136	**EL12SOMD**	630	630
	16	12	33	24.5	36.5	43	24	30	260	**EL16SOMD**	630	400
	20	16	37	26.5	44.5	48	27	36	375	**EL20SOMD**	420	400
	25	20	42	30.0	50.0	54	36	46	655	**EL25SOMD**	420	400
	30	25	49	35.5	55.0	62	41	50	906	**EL30SOMD**	420	400
	38	32	57	41.0	63.0	72	50	60	1472	**EL38SOMD**	420	315

[1]) Pressure shown = item deliverable

[3]) L = light series; [4]) S = heavy series

$\frac{\text{PN (bar)}}{10}$ = PN (MPa)

Delivery without nut and ring. Information on ordering complete fittings or alternative sealing materials see page I7.

*Please add the **suffixes** below according to the material/surface required.

Order code suffixes			
Material	Suffix surface and material	Example	Standard sealing material (no additonal. suffix needed)
Steel	CF	EL16SOMDCF	NBR
Stainless Steel	71	EL16SOMD71	VIT