RED Tube end reducer

EO 24° DKO swivel / EO 24° cone end

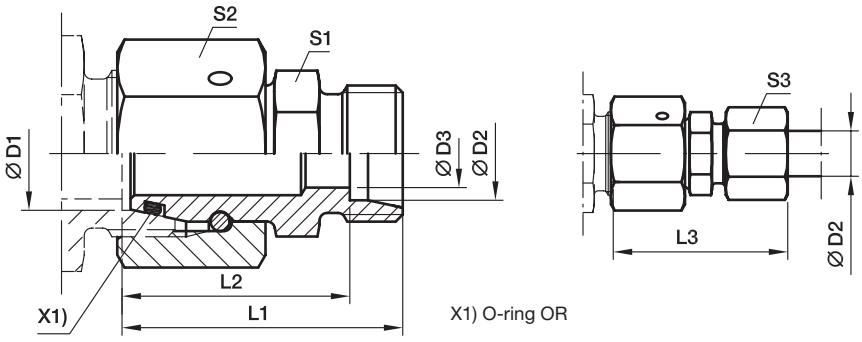

Series [2) 3) 4)]	D1	D2	D3	L1	L2	L3	S1	S2	S3	Weight g/1 piece	Order code*	PN (bar)[1)] Steel	71
L/S	35	25	20.0	52.0	40.0	64.0	41	50	46	366	**RED35L/25SOMD**	250	160
L	35	28	24.0	48.0	40.5	57.0	41	50	41	327	**RED35/28LOMD**	250	160
L/S	35	30	25.0	55.0	41.5	68.0	46	50	50	435	**RED35L/30SOMD**	250	160
L	42	10	8.0	48.5	41.5	56.0	50	60	19	537	**RED42/10LOMD**	250	160
L	42	12	10.0	48.5	41.5	56.0	50	60	22	538	**RED42/12LOMD**	250	160
L	42	15	12.0	49.5	42.5	58.0	50	60	27	534	**RED42/15LOMD**	250	160
L	42	18	15.0	49.5	42.0	58.0	50	60	32	544	**RED42/18LOMD**	250	160
L	42	22	19.0	51.5	44.0	60.0	50	60	36	543	**RED42/22LOMD**	250	160
L	42	28	24.0	51.5	44.0	61.0	50	60	41	539	**RED42/28LOMD**	250	160
L/S	42	30	25.0	57.5	44.0	70.5	50	60	50	588	**RED42L/30SOMD**	250	160
L	42	35	30.0	53.5	43.0	65.0	50	60	50	541	**RED42/35LOMD**	250	160
L/S	42	38	32.0	61.5	45.5	76.0	55	60	60	701	**RED42L/38SOMD**	250	160

[1)] Pressure shown = item deliverable

[2)] LL = very light series; [3)] L = light series; [4)] S = heavy series

$\frac{\text{PN (bar)}}{10}$ = PN (MPa)

Delivery without nut and ring. Information on ordering complete fittings or alternative sealing materials see page I7.

*Please add the **suffixes** below according to the material/surface required.

Order code suffixes			
Material	Suffix surface and material	Example	Standard sealing material (no additonal. suffix needed)
Steel	CF	RED18/15LOMDCF	NBR
Stainless Steel	71	RED18/15LOMD71	VIT