GE-R(KEG) Male stud connector

Male short BSPT taper thread (DIN 3852-2, type C) / EO 24° cone end

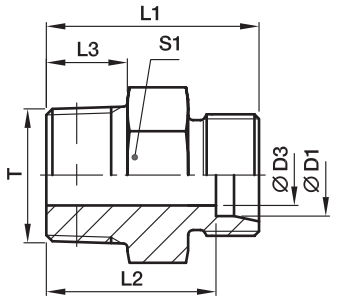

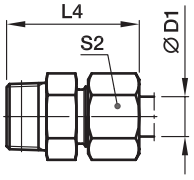

Series	D1	T	D3	L1	L2	L3	L4	S1	S2	Weight g/1 piece	Order code*	PN (bar)[1] Steel	71	MS
LL[2])	04	R 1/8 tap.	3.0	20	16.0	8	26	11*	10	8	**GE04LLR**	100	100	63
	06	R 1/8 tap.	4.5	20	14.5	8	26	11*	12	8	**GE06LLR**	100	100	63
	08	R 1/8 tap.	6.0	22	16.5	8	28	12	14	10	**GE08LLR**	100	100	63
	08	R 1/4 tap.	6.0	26	20.5	12	32	14	14	18	**GE08LLR1/4**	100	100	63
	10	R 1/4 tap.	8.0	26	20.5	12	32	14	17	15	**GE10LLR**	100		63
	12	R 1/4 tap.	8.0	26	20.0	12	32	17	19	18	**GE12LLR**	100		63
	12	R 3/8 tap.	10.0	26	20.0	12	32	17	19	23	**GE12LLR3/8**	100		63
L[3])	06	R 1/8 tap.	4.0	22	15.0	8	30	12	14	11	**GE06LR1/8KEG**	315	315	
	06	R 1/4 tap.	4.0	27	20.0	12	35	17	14	24	**GE06LR1/4KEG**	315	315	200
	08	R 1/8 tap.	4.0	23	16.0	8	31	14	17	15	**GE08LR1/8KEG**	315	315	200
	08	R 1/4 tap.	6.0	27	20.0	12	35	17	17	22	**GE08LR1/4KEG**	315	315	
	10	R 1/4 tap.	7.0	28	21.0	12	36	17	19	24	**GE10LR1/4KEG**	315	315	
	12	R 1/4 tap.	7.0	29	22.0	12	37	19	22	53	**GE12LR1/4KEG**	315	315	200
	12	R 3/8 tap.	9.0	29	22.0	12	37	19	22	33	**GE12LR3/8KEG**	315	315	
	12	R 1/2 tap.	10.0	31	24.0	14	39	24	22	53	**GE12LR1/2KEG**	315	315	200
	15	R 3/8 tap.	9.0	30	23.0	12	38	24	27	49	**GE15LR3/8KEG**	315	315	200
	15	R 1/2 tap.	11.0	32	25.0	14	40	24	27	59	**GE15LR1/2KEG**	315	315	
	18	R 1/2 tap.	14.0	33	25.5	14	42	27	32	64	**GE18LR1/2KEG**	315	315	
	22	R 3/4 tap.	17.0	37	29.5	16	46	32	36	99	**GE22LR3/4KEG**	160	160	
	28	R 1 tap.	23.0	40	32.5	18	49	41	41	154	**GE28LR1KEG**	160	160	
	35	R 1 1/4 tap.	30.0	45	34.5	20	56	46	50	238	**GE35LR11/4KEG**	160	160	
	42	R 1 1/2 tap.	36.0	49	38.0	22	61	55	60	335	**GE42LR11/2KEG**	160	160	

[1]) Pressure shown = item deliverable

[2]) LL = very light series; [3]) L = light series

$\frac{\text{PN (bar)}}{10}$ = PN (MPa)

Delivery without nut and ring. Information on ordering complete fittings see page I7.

*) S1 = 12 for 1.4571

*Please add the **suffixes** below according to the material/surface required.

Order code suffixes		
Material	Suffix surface and material	Example
Steel	CFX	GE06LR1/4KEGCFX
Stainless Steel	71X	GE06LR1/4KEG71X
Brass	MSX	GE06LR1/4KEGMSX