GE-M Male stud connector

Male metric thread – metal sealing edge (ISO 9974) / EO 24° cone end

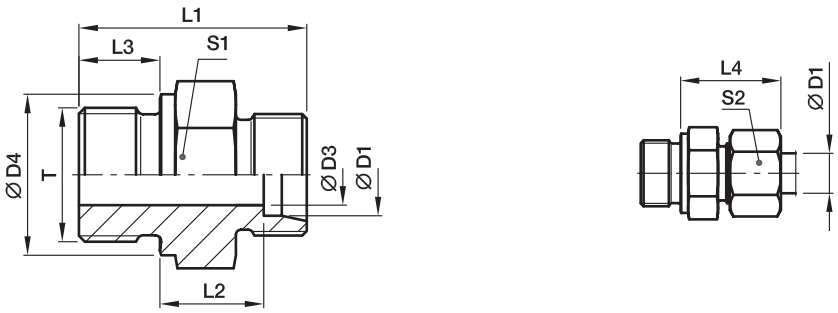

Series	D1	T	D3	D4	L1	L2	L3	L4	S1	S2	Weight g/1 piece	Order code*	PN (bar)[1] Steel	71	MS
L[3])	06	M 10×1.0	4	14	23.5	8.5	8	23	14	14	13	**GE06LM**	315	315	200
	08	M 12×1.5	6	17	29.0	10.0	12	25	17	17	22	**GE08LM**	315	315	200
	10	M 14×1.5	7	19	30.0	11.0	12	26	19	19	31	**GE10LM**	315	315	200
	10	M 10×1.0	4	14	25.5	10.5	8	25	17	19	20	**GE10LM10X1**	315	315	
	10	M 12×1.5	6	17	30.0	11.0	12	26	17	19	25	**GE10LM12X1.5**	315	315	
	10	M 16×1.5	8	21	31.5	12.0	12	27	22	19	41	**GE10LM16X1.5**	315	315	
	10	M 18×1.5	8	23	31.5	12.5	12	27	24	19	50	**GE10LM18X1.5**	315	315	
	10	M 22×1.5	8	27	35.0	14.0	14	29	27	19	72	**GE10LM22X1.5**	315	315	
	12	M 14×1.5	7	19	30.0	11.0	12	26	19	22	30	**GE12LM14X1.5**	315	315	
	12	M 16×1.5	9	21	31.5	12.5	12	27	22	22	40	**GE12LM**	315	315	
	12	M 18×1.5	10	23	31.5	12.5	12	27	24	22	47	**GE12LM18X1.5**	315	315	
	12	M 22×1.5	10	27	35.0	14.0	14	29	27	22	76	**GE12LM22X1.5**	315	315	
	15	M 16×1.5	9	21	32.0	13.0	12	28	24	27	50	**GE15LM16X1.5**	250	250	
	15	M 18×1.5	11	23	32.5	13.5	12	29	24	27	52	**GE15LM**	250	250	160
	15	M 22×1.5	12	27	36.0	15.0	14	30	27	27	77	**GE15LM22X1.5**	250	250	
	18	M 18×1.5	11	23	33.5	14.0	12	30	27	32	68	**GE18LM18X1.5**	250	250	
	18	M 22×1.5	14	27	36.0	14.5	14	31	27	32	77	**GE18LM**	250	250	160
	22	M 22×1.5	14	27	38.0	16.5	14	33	32	36	92	**GE22LM22X1.5**	160	160	
	22	M 26×1.5	18	31	40.0	16.5	16	33	32	36	102	**GE22LM**	160	160	100
	28	M 33×2.0	23	39	43.0	17.5	18	34	41	41	168	**GE28LM**	160	160	100
	35	M 42×2.0	30	49	48.0	17.5	20	39	50	50	280	**GE35LM**	160	160	100
	42	M 48×2.0	36	55	52.0	19.0	22	42	55	60	354	**GE42LM**	160	160	100
S[4])	06	M 12×1.5	4	17	32.0	13.0	12	28	17	17	30	**GE06SM**	400	400	250
	06	M 14×1.5	4	19	34.0	15.0	12	30	19	17	42	**GE06SM14X1.5**	400	400	
	08	M 14×1.5	5	19	34.0	15.0	12	30	19	19	43	**GE08SM**	400	400	250
	10	M 16×1.5	7	21	34.5	15.0	12	31	22	22	54	**GE10SM**	400	400	250
	12	M 18×1.5	8	23	36.5	17.0	12	33	24	24	72	**GE12SM**	400	400	250
	12	M 14×1.5	5	19	36.0	16.5	12	33	22	24	60	**GE12SM14X1.5**	400	400	
	12	M 22×1.5	8	27	39.0	17.5	14	34	27	24	103	**GE12SM22X1.5**	400	400	
	16	M 18×1.5	8	23	38.5	18.0	12	36	27	30	88	**GE16SM18X1.5**	400	400	
	16	M 22×1.5	12	27	41.0	18.5	14	37	27	30	97	**GE16SM**	400	400	250
	20	M 27×2.0	16	32	47.0	20.5	16	42	32	36	155	**GE20SM**	400	400	250
	25	M 33×2.0	20	39	53.0	23.0	18	47	41	46	268	**GE25SM**	250	250	160
	30	M 42×2.0	25	49	57.0	23.5	20	50	50	50	421	**GE30SM**	160	160	100
	38	M 48×2.0	32	55	64.0	26.0	22	57	55	60	568	**GE38SM**	160	160	100

[1]) Pressure shown = item deliverable

[3]) L = light series; [4]) S = heavy series

$\frac{\text{PN (bar)}}{10}$ = PN (MPa)

Delivery without nut and ring. Information on ordering complete fittings see page I7.

*Please add the **suffixes** below according to the material/surface required.

Order code suffixes		
Material	Suffix surface and material	Example
Steel	CFX	GE16SMCFX
Stainless Steel	71X	GE16SM71X
Brass	MSX	GE16SMMSX