EW-M-ED Assembled adjustable swivel elbow

EO 24° cone end / Male metric thread – ED-seal (ISO 9974)

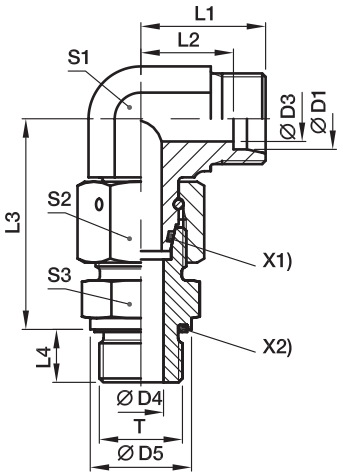

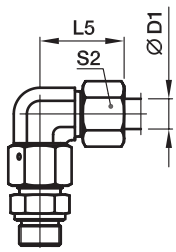

X1) O-ring OR
X2) Eolastic-sealing ED

Series	D1	T	D3	D4	D5	L1	L2	L3	L4	L5	S1	S2	S3	Weight g/1 piece	Order code*	PN (bar)[1] Steel	71
L[3]	06	M 10×1.0	4	4	14	19	12.0	34.5	8	27	12	14	14	47	**EW06LMEDOMD**	500	315
	08	M 12×1.5	6	6	17	21	14.0	37.5	12	29	12	17	17	69	**EW08LMEDOMD**	500	315
	10	M 14×1.5	8	7	19	22	15.0	40.0	12	30	14	19	19	87	**EW10LMEDOMD**	500	315
	12	M 16×1.5	10	9	22	24	17.0	42.0	12	32	17	22	22	111	**EW12LMEDOMD**	400	315
	15	M 18×1.5	12	11	24	28	21.0	46.0	12	36	19	27	24	179	**EW15LMEDOMD**	400	315
	18	M 22×1.5	15	14	27	31	23.5	50.0	14	40	24	32	27	272	**EW18LMEDOMD**	400	315
	22	M 26×1.5	19	18	32	35	27.5	55.0	16	44	27	36	32	360	**EW22LMEDOMD**	250	160
	28	M 33×2.0	24	23	40	38	30.5	59.0	18	47	36	41	41	538	**EW28LMEDOMD**	250	160
	35	M 42×2.0	30	30	50	45	34.5	68.5	20	56	41	50	50	843	**EW35LMEDOMD**	250	160
	42	M 48×2.0	36	36	55	51	40.0	75.0	22	63	50	60	55	1353	**EW42LMEDOMD**	250	160
S[4]	06	M 12×1.5	4	4	17	23	16.0	40.0	12	31	12	17	17	77	**EW06SMEDOMD**	800	630
	08	M 14×1.5	5	5	19	24	17.0	42.5	12	32	14	19	19	107	**EW08SMEDOMD**	800	630
	10	M 16×1.5	6	7	22	25	17.5	45.0	12	34	17	22	22	146	**EW10SMEDOMD**	800	630
	12	M 18×1.5	8	8	24	29	21.5	48.0	12	38	17	24	24	178	**EW12SMEDOMD**	630	630
	16	M 22×1.5	12	12	27	33	24.5	55.0	14	43	24	30	27	307	**EW16SMEDOMD**	630	400
	20	M 27×2.0	16	16	32	37	26.5	65.0	16	48	27	36	32	459	**EW20SMEDOMD**	420	400
	25	M 33×2.0	20	20	40	42	30.0	73.0	18	54	36	46	41	812	**EW25SMEDOMD**	420	400
	30	M 42×2.0	25	25	50	49	35.5	78.5	20	62	41	50	50	1167	**EW30SMEDOMD**	420	400
	38	M 48×2.0	32	32	55	57	41.0	89.0	22	72	50	60	55	1790	**EW38SMEDOMD**	420	315

[1]) Pressure shown = item deliverable
[3]) L = light series; [4]) S = heavy series

$\frac{\text{PN (bar)}}{10}$ = PN (MPa)

Delivery without nut and ring. Information on ordering complete fittings or alternative sealing materials see page I7.

*Please add the **suffixes** below according to the material/surface required.

Order code suffixes			
Material	Suffix surface and material	Example	Standard sealing material (no additonal. suffix needed)
Steel	CF	EW16SMEDOMDCF	NBR
Stainless Steel	71	EW16SMEDOMD71	VIT