EW-R-ED Assembled adjustable swivel elbow

EO 24° cone end / Male BSPP thread – ED-seal (ISO 1179)

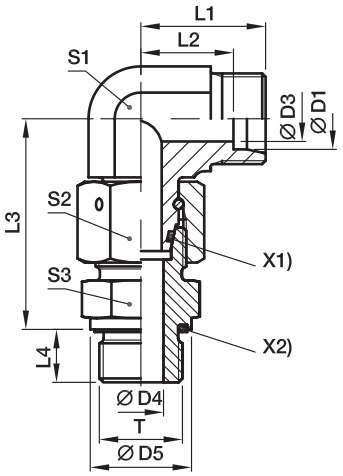

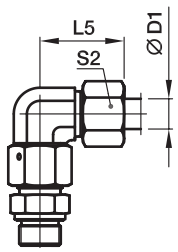

X1) O-ring OR
X2) Eolastic-sealing ED

Series	D1	T	D3	D4	D5	L1	L2	L3	L4	L5	S1	S2	S3	Weight g/1 piece	Order code*	PN (bar)[1] Steel	71
L[3])	06	G 1/8 A	4	4	14	19	12.0	34.5	8	27	12	14	14	47	**EW06LREDOMD**	500	315
	08	G 1/4 A	6	6	19	21	14.0	37.5	12	29	12	17	19	69	**EW08LREDOMD**	500	315
	10	G 1/4 A	8	6	19	22	15.0	40.0	12	30	14	19	19	87	**EW10LREDOMD**	500	315
	12	G 3/8 A	10	9	22	24	17.0	42.0	12	32	17	22	22	122	**EW12LREDOMD**	400	315
	15	G 1/2 A	12	11	27	28	21.0	46.5	14	36	19	27	27	199	**EW15LREDOMD**	400	315
	18	G 1/2 A	15	14	27	31	23.5	50.0	14	40	24	32	27	268	**EW18LREDOMD**	400	315
	22	G 3/4 A	19	18	32	35	27.5	55.0	16	44	27	36	32	360	**EW22LREDOMD**	250	160
	28	G 1 A	24	23	40	38	30.5	59.0	18	47	36	41	41	539	**EW28LREDOMD**	250	160
	35	G 1 1/4 A	30	30	50	45	34.5	68.5	20	56	41	50	50	834	**EW35LREDOMD**	250	160
	42	G 1 1/2 A	36	36	55	51	40.0	75.0	22	63	50	60	55	1341	**EW42LREDOMD**	250	160
S[4])	06	G 1/4 A	4	4	19	23	16.0	40.0	12	31	12	17	19	83	**EW06SREDOMD**	800	630
	08	G 1/4 A	5	5	19	24	17.0	42.5	12	32	14	19	19	106	**EW08SREDOMD**	800	630
	10	G 3/8 A	6	7	22	25	17.5	45.0	12	34	17	22	22	148	**EW10SREDOMD**	800	630
	12	G 3/8 A	8	8	22	29	21.5	48.0	12	38	17	24	22	170	**EW12SREDOMD**	630	630
	16	G 1/2 A	12	12	27	33	24.5	55.0	14	43	24	30	27	303	**EW16SREDOMD**	630	400
	20	G 3/4 A	16	16	32	37	26.5	65.0	16	48	27	36	32	458	**EW20SREDOMD**	420	400
	25	G 1 A	20	20	40	42	30.0	73.0	18	54	36	46	41	813	**EW25SREDOMD**	420	400
	30	G 1 1/4 A	25	25	50	49	35.5	78.5	20	62	41	50	50	1163	**EW30SREDOMD**	420	400
	38	G 1 1/2 A	32	32	55	57	41.0	89.0	22	72	50	60	55	1784	**EW38SREDOMD**	420	315

[1]) Pressure shown = item deliverable

[3]) L = light series; [4]) S = heavy series

$\frac{\text{PN (bar)}}{10}$ = PN (MPa)

Delivery without nut and ring. Information on ordering complete fittings or alternative sealing materials see page I7.

*Please add the **suffixes** below according to the material/surface required.

Order code suffixes			
Material	Suffix surface and material	Example	Standard sealing material (no additonal. suffix needed)
Steel	CF	EW16SREDOMDCF	NBR
Stainless Steel	71	EW16SREDOMD71	VIT