WHK-M High pressure banjo elbow

EO 24° cone end / Male metric thread with metal sealing

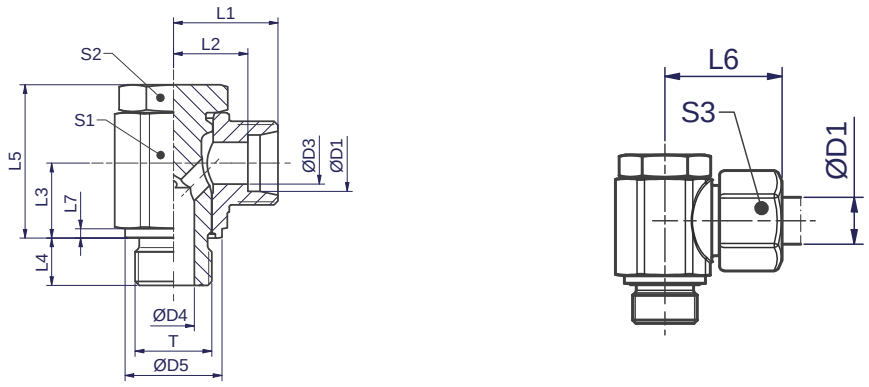

Series	D1	T	D3	D4	D5	L1	L2	L3	L4	L5	L6	L7	S1	S2	S3	Weight g/1 piece	Order code*	PN (bar)[1] Steel
LL[2]	04	M 08×1.0	3.0	3.0	12.5	14.8	10.6	8.0	7.7	17.0	20.3	1.15	12.0	12.0	10.0	19	**WHK04LLMOMD**	100
	06	M 10×1.0	4.5	4.5	14.8	15.8	10.1	10.0	7.7	22.0	21.8	1.15	14.0	13.0	12.0	32	**WHK06LLMOMD**	100
	08	M 10×1.0	6.0	4.5	14.8	16.8	11.1	10.0	7.7	22.0	22.8	1.15	14.0	13.0	14.0	35	**WHK08LLMOMD**	100
L[3]	06	M 10×1.0	4.0	4.5	14.8	17.5	10.4	10.0	7.7	22.0	25.0	1.15	14.0	13.0	14.0	35	**WHK06LMOMD**	250
	08	M 12×1.5	6.0	5.5	17.8	19.6	12.5	12.0	11.5	26.5	26.8	1.65	19.0	17.0	17.0	66	**WHK08LMOMD**	250
	10	M 14×1.5	8.0	6.0	19.8	21.3	14.1	13.0	11.5	27.5	28.8	1.65	19.0	17.0	19.0	74	**WHK10LMOMD**	250
	12	M 16×1.5	10.0	7.5	22.8	23.3	16.1	16.0	11.5	34.0	30.8	1.65	24.0	22.0	22.0	133	**WHK12LMOMD**	250
	15	M 18×1.5	12.0	9.0	24.8	26.0	18.9	18.0	11.5	38.0	34.0	2.15	27.0	24.0	27.0	182	**WHK15LMOMD**	250
	18	M 22×1.5	15.0	12.0	27.8	28.3	20.6	21.5	13.6	44.0	36.8	2.65	30.0	27.0	32.0	266	**WHK18LMOMD**	250
	22	M 26×1.5	19.0	17.0	32.8	33.0	25.4	24.0	15.5	50.5	41.5	2.65	36.0	32.0	36.0	403	**WHK22LMOMD**	160
	28	M 33×2.0	24.0	21.0	40.8	39.4	31.7	30.5	17.5	62.0	48.4	2.65	46.0	41.0	41.0	773	**WHK28LMOMD**	160
	35	M 42×2.0	30.0	27.0	50.8	46.4	35.7	35.5	19.6	74.0	57.4	2.65	60.0	50.0	50.0	1465	**WHK35LMOMD**	160
	42	M 48×2.0	36.0	34.0	55.8	51.4	40.2	40.5	21.6	83.5	62.9	2.65	65.0	55.0	60.0	1890	**WHK42LMOMD**	160
S[4]	06	M 12×1.5	4.0	5.5	17.8	22.3	15.1	12.0	11.5	26.5	29.8	1.65	19.0	17.0	17.0	75	**WHK06SMOMD**	315
	08	M 14×1.5	5.0	6.0	19.8	22.3	15.1	13.0	11.5	27.5	29.8	1.65	19.0	17.0	19.0	84	**WHK08SMOMD**	315
	10	M 16×1.5	7.0	7.5	22.8	23.8	16.1	16.0	11.5	34.0	32.3	1.65	24.0	22.0	22.0	138	**WHK10SMOMD**	315
	12	M 18×1.5	8.0	9.0	24.8	26.0	18.4	18.0	11.5	38.0	34.5	2.15	27.0	24.0	24.0	184	**WHK12SMOMD**	315
	16	M 22×1.5	12.0	12.0	27.8	30.0	21.4	21.5	13.6	44.0	39.5	2.65	30.0	27.0	30.0	271	**WHK16SMOMD**	315
	20	M 27×2.0	16.0	16.0	32.8	35.0	24.4	24.0	15.5	50.5	46.0	2.65	36.0	32.0	36.0	429	**WHK20SMOMD**	160
	25	M 33×2.0	20.0	21.0	40.8	43.4	31.2	30.5	17.5	62.0	55.4	2.65	46.0	41.0	46.0	803	**WHK25SMOMD**	160
	30	M 42×2.0	25.0	27.0	50.8	50.5	36.9	35.5	19.6	74.0	63.5	2.65	60.0	50.0	50.0	1500	**WHK30SMOMD**	160
	38	M 48×2.0	32.0	34.0	55.8	57.5	41.4	40.5	21.6	83.5	72.0	2.65	65.0	55.0	60.0	1971	**WHK38SMOMD**	160

[1]) Pressure shown = item deliverable

[2]) LL = very light series; [3]) L = light series; [4]) S = heavy series

$\frac{\text{PN (bar)}}{10}$ = PN (MPa)

Delivery without nut and ring. Information on ordering complete fittings or alternative sealing materials see page I7.

*Please add the **suffixes** below according to the material/surface required.

Order code suffixes			
Material	Suffix surface and material	Example	Standard sealing material (no additonal. suffix needed)
Steel	CF	WHK16SMOMDCF	