WHK-R High pressure banjo elbow

EO 24° cone end / Male BSPP thread with metal sealing

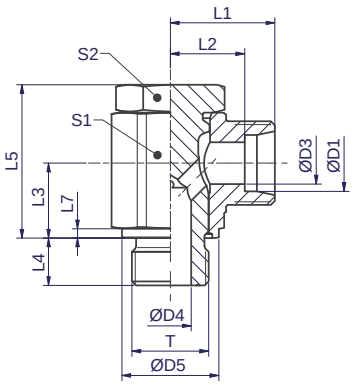

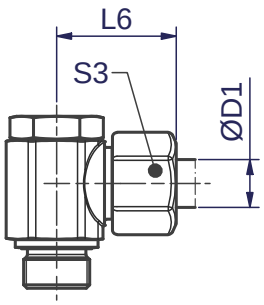

Series	D1	T	D3	D4	D5	L1	L2	L3	L4	L5	L6	L7	S1	S2	S3	Weight g/1 piece	Order code*	PN (bar)[1] Steel
LL[2]	04	G 1/8 A	3.0	4.5	14.8	15.8	11.6	10.0	8.0	22.0	21.3	1.15	14.0	13.0	10.0	31	**WHK04LLROMD**	100
	06	G 1/8 A	4.5	4.5	14.8	15.8	10.1	10.0	8.0	22.0	21.8	1.15	14.0	13.0	12.0	32	**WHK06LLROMD**	100
	08	G 1/8 A	6.0	4.5	14.8	16.8	11.1	10.0	8.0	22.0	22.8	1.15	14.0	13.0	14.0	35	**WHK08LLROMD**	100
L[3]	06	G 1/8 A	4.0	4.5	14.8	17.5	10.4	10.0	8.0	22.0	25.0	1.15	14.0	13.0	14.0	35	**WHK06LROMD**	250
	08	G 1/4 A	6.0	6.0	19.8	20.3	13.1	13.0	11.5	27.5	26.8	1.65	19.0	17.0	17.0	70	**WHK08LROMD**	250
	10	G 1/4 A	8.0	6.0	19.8	21.3	14.1	13.0	11.5	27.5	28.8	1.65	19.0	17.0	19.0	73	**WHK10LROMD**	250
	12	G 3/8 A	10.0	7.5	22.8	23.3	16.1	16.0	11.5	34.0	30.8	2.15	24.0	22.0	22.0	135	**WHK12LROMD**	250
	15	G 1/2 A	12.0	12.0	27.8	27.5	20.4	21.5	14.0	44.0	35.5	2.65	30.0	27.0	27.0	254	**WHK15LROMD**	250
	18	G 1/2 A	15.0	12.0	27.8	28.3	20.6	21.5	14.0	44.0	36.8	2.65	30.0	27.0	32.0	260	**WHK18LROMD**	250
	22	G 3/4 A	19.0	16.0	32.8	33.0	25.4	24.0	15.5	50.5	41.5	2.65	36.0	32.0	36.0	413	**WHK22LROMD**	160
	28	G 1 A	24.0	21.0	40.8	39.4	31.7	30.5	18.0	62.0	48.4	2.65	46.0	41.0	41.0	772	**WHK28LROMD**	160
	35	G 1 1/4 A	30.0	27.0	50.8	46.4	35.7	35.5	19.6	74.0	57.4	2.65	60.0	50.0	50.0	1462	**WHK35LROMD**	160
	42	G 1 1/2 A	36.0	34.0	55.8	51.4	40.2	40.5	21.6	83.5	62.9	2.65	65.0	55.0	60.0	1884	**WHK42LROMD**	160
S[4]	06	G 1/4 A	4.0	6.0	19.8	22.3	15.1	13.0	11.5	27.5	29.8	1.65	19.0	17.0	17.0	79	**WHK06SROMD**	315
	08	G 1/4 A	5.0	6.0	19.8	22.3	15.1	13.0	11.5	27.5	29.8	1.65	19.0	17.0	19.0	83	**WHK08SROMD**	315
	10	G 3/8 A	7.0	7.5	22.8	23.8	16.1	16.0	11.5	34.0	32.3	2.15	24.0	22.0	22.0	140	**WHK10SROMD**	315
	12	G 3/8 A	8.0	7.5	22.8	23.8	16.1	16.0	11.5	34.0	32.3	2.15	24.0	22.0	24.0	143	**WHK12SROMD**	315
	16	G 1/2 A	12.0	12.0	27.8	30.0	21.4	21.5	14.0	44.0	39.5	2.65	30.0	27.0	30.0	266	**WHK16SROMD**	315
	20	G 3/4 A	16.0	16.0	32.8	35.0	24.4	24.0	15.5	50.5	46.0	2.65	36.0	32.0	36.0	427	**WHK20SROMD**	160
	25	G 1 A	20.0	21.0	40.8	43.5	31.2	30.5	18.0	62.0	55.4	2.65	46.0	41.0	46.0	802	**WHK25SROMD**	160
	30	G 1 1/4 A	25.0	27.0	50.8	50.5	36.9	35.5	19.6	74.0	63.5	2.65	60.0	50.0	50.0	1497	**WHK30SROMD**	160
	38	G 1 1/2 A	32.0	34.0	55.8	57.5	41.4	40.5	21.6	83.5	72.0	2.65	65.0	55.0	60.0	1965	**WHK38SROMD**	160

[1]) Pressure shown = item deliverable

[2]) LL = very light series; [3]) L = light series; [4]) S = heavy series

$\frac{\text{PN (bar)}}{10}$ = PN (MPa)

Delivery without nut and ring. Information on ordering complete fittings or alternative sealing materials see page I7.

*Please add the **suffixes** below according to the material/surface required

Order code suffixes			
Material	Suffix surface and material	Example	Standard sealing material (no additonal. suffix needed)
Steel	CF	WHK16SROMDCF	