VKAM Blanking plug with nut for cone

EO 24° DKO swivel

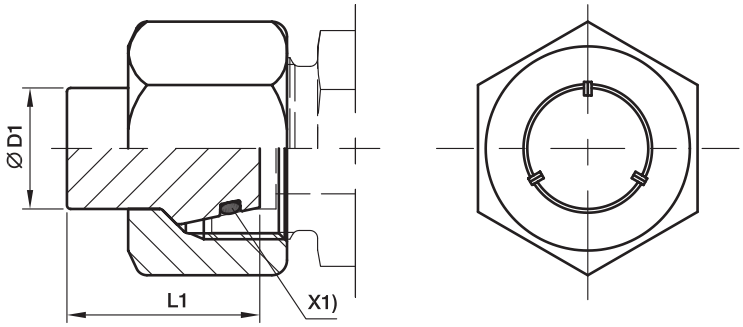

X1) O-ring OR

Series	D1	L1	Weight g/1 piece	Order code*	PN (bar)[1] Steel	71
L[3])	06	18.5	15	**VKAM06L**	500	315
	08	18.5	24	**VKAM08L**	500	315
	10	20.0	33	**VKAM10L**	500	315
	12	20.5	46	**VKAM12L**	400	315
	15	20.5	73	**VKAM15L**	400	315
	18	22.5	111	**VKAM18L**	400	315
	22	25.0	162	**VKAM22L**	250	160
	28	25.5	220	**VKAM28L**	250	160
	35	30.0	376	**VKAM35L**	250	160
	42	30.0	558	**VKAM42L**	250	160
S[4])	06	18.5	23	**VKAM06S**	800	630
	08	18.5	29	**VKAM08S**	800	630
	10	20.0	46	**VKAM10S**	800	630
	12	20.5	55	**VKAM12S**	630	630
	16	23.5	106	**VKAM16S**	630	400
	20	28.5	180	**VKAM20S**	420	400
	25	29.0	322	**VKAM25S**	420	400
	30	30.5	398	**VKAM30S**	420	400
	38	33.0	647	**VKAM38S**	420	315

[1]) Pressure shown = item deliverable

[3]) L = light series; [4]) S = heavy series

$\frac{\text{PN (bar)}}{10}$ = PN (MPa)

Information on ordering alternative sealing materials see page I7.

*Please add the **suffixes** below according to the material/surface required.

Order code suffixes			
Material	Suffix surface and material	Example	Standard sealing material (no additonal. suffix needed)
Steel	CF	VKAM16SCF	NBR
Stainless Steel	71	VKAM16S71	VIT