R6MX Swivel nut run tee

Triple-Lok® 37° Flare ends / Triple-Lok® 37° Flare female swivel end
SAE 070432

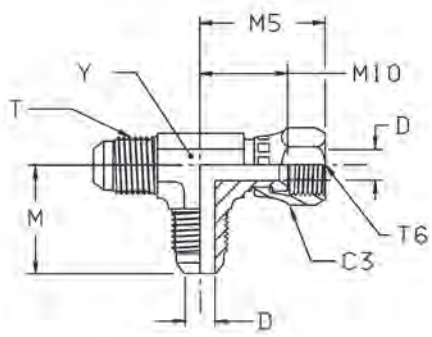

Tube O.D. mm	Tube O.D. in.	Thread UN/UNF-2A T	Thread UN/UNF-2B T6	C3 mm	D mm	M mm	M5 mm	M10 mm	Y mm	Weight (steel) g/1 piece	Triple-Lok® Steel	Triple-Lok® Stainless Steel	PN (bar) S	PN (bar) SS
6	1/4	7/16-20	7/16-20	14.0	4.4	23	26	17	11.0	44	**4R6MXS**	**4 R6X-SS**	500	350
8	5/16	1/2-20	1/2-20	17.0	6.0	24	26	17	13.0	56	**5R6MXS**	**5 R6X-SS**	420	350
10	3/8	9/16-18	9/16-18	19.0	7.5	27	32	22	14.0	69	**6R6MXS**	**6 R6X-SS**	350	350
12	1/2	3/4-16	3/4-16	22.0	9.9	32	35	24	19.0	136	**8R6MXS**	**8 R6X-SS**	350	350
14, 15,16	5/8	7/8-14	7/8-14	27.0	12.3	37	41	28	22.0	207	**10R6MXS**	**10 R6X-SS**	350	350
18, 20	3/4	1 1/16-12	1 1/16-12	32.0	15.5	42	43	30	27.0	319	**12R6MXS**	**12 R6X-SS**	350	350
22	7/8	1 3/16-12	1 3/16-12	35.0	18.2	46	46	49	34.0	333	**14 R6X-S**	**14 R6MX-SS**	250	250
25	1	1 5/16-12	1 5/16-12	38.0	21.5	46	51	36	33.0	489	**16R6MXS**	**16 R6X-SS**	250	250
28, 30, 32	1 1/4	1 5/8-12	1 5/8-12	50.8	27.4	52	60	43	41.0	712	**20 R6X-S**	**20 R6X-SS**	250	210
35, 38	1 1/2	1 7/8-12	1 7/8-12	57.0	33.3	59	66	47	47.7	1100	**24 R6X-S**	**24 R6X-SS**	170	170

Order codes shown are part of our current manufacturing programme.

Imperial and metric parts may vary in hexagon dimensions.

$\frac{\text{PN (bar)}}{10} = \text{PN (MPa)}$

Do not create drawings from these dimensions, they are subject to change and ISO manufacturing allowances.

K