F5OMX Male stud connector

Triple-Lok® 37° Flare end / Male UN/UNF thread – O-ring (ISO 11926)
SAE 070120 MS51525

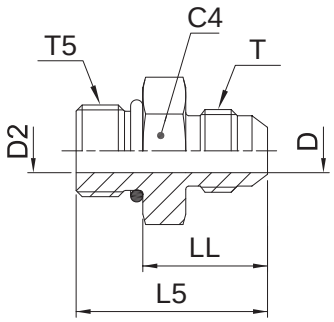

Tube O.D. mm	Tube O.D. in.	Thread UN/UNF-2A T5	Thread UN/UNF-2A T	C4 mm	D mm	D2 mm	L5 mm	LL mm	Weight (steel) g/1 piece	Triple-Lok® Steel	Triple-Lok® Stainless Steel	PN (bar) S	PN (bar) SS
25	1	7/8-14	1 5/16-12	35.0	21.4	12.3	53	40.0	183	**16-10 F5OX-S**	**16-10F5OMXSS**	280	280
25	1	1 1/16-12	1 5/16-12	36.0	21.4	15.5	52	36.5	204	**16-12F5OMXS**	**16-12F5OMXSS**	280	280
25	1	1 3/16-12	1 5/16-12	35.0	21.4	18.3	52	37.0	198	**16-14 F5OX-S**	**16-14F5OMXSS**	280	280
25	1	1 5/8-12	1 5/16-12	47.6	21.4	21.4	54	39.0	270	**16-20 F5OX-S**	**16-20F5OMXSS**	280	280
25	1	1 7/8-12	1 5/16-12	54.0	21.4	21.4	56	41.0	310	**16-24 F5OX-S**	**16-24F5OMXSS**	210	210
28, 30, 32	1 1/4	1 5/8-12	1 5/8-12	50.0	27.5	27.5	55	40.0	274	**20F5OMXS**	**20F5OMXSS**	280	210
28, 30, 32	1 1/4	1 1/16-12	1 5/8-12	43.0	27.4	15.5	58	43.0	250	**20-12 F5OX-S**	**20-12F5OMXSS**	280	210
28, 30, 32	1 1/4	1 5/16-12	1 5/8-12	43.0	27.4	21.4	59	44.0	280	**20-16 F5OX-S**	**20-16F5OMXSS**	280	210
28, 30, 32	1 1/4	1 7/8-12	1 5/16-12	54.0	27.4	27.4	57	42.0	454	**20-24 F5OX-S**		280	210
35, 38	1 1/2	1 7/8-12	1 7/8-12	55.0	33.0	33.0	60	45.0	355	**24F5OMXS**	**24F5OMXSS**	210	140
35, 38	1 1/2	1 5/8-12	1 7/8-12	51.0	33.3	27.4	64	49.0	340	**24-20 F5OX-S**	**24-20F5OMXSS**	210	140
35, 38	1 1/2	2 1/2-12	1 7/8-12	70.0	33.3	33.3	64	49.0	400	**24-32 F5OX-S**		140	—
	2	2 1/2-12	2 1/2-12	70.0	45.2	45.2	71	56.0	650	**32 F5OX-S**		140	—
	2	1 7/8-12	2 1/2-12	66.7	45.2	33.3	75	60.0	600	**32-24 F5OX-S**		140	—

Steel, stainless steel and brass Triple-Lok® parts are delivered with NBR elastomeric seals as standard. For more details on other seal materials see page K92.

Order codes shown are part of our current manufacturing programme.

Imperial and metric parts may vary in hexagon dimensions.

$$\frac{\text{PN (bar)}}{10} = \text{PN (MPa)}$$

Do not create drawings from these dimensions, they are subject to change and ISO manufacturing allowances.