F8OMX Male stud connector

Triple-Lok® 37° Flare end / Male metric thread – O-ring + retainer ring

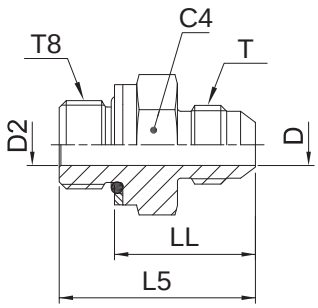

Tube O.D. mm	Tube O.D. in.	Thread Metric T8	Thread UN/UNF-2A T	C4 mm	D mm	D2 mm	L5 mm	LL mm	Weight (steel) g/1 piece	Triple-Lok® Steel	Triple-Lok® Stainless Steel	PN (bar) S	PN (bar) SS
6	1/4	M 10×1.0	7/16-20	14	4.4	4.4	30.0	21.5	25	**4M10F8OMXS**	**4M10F8OMXSS**	350	350
6	1/4	M 12×1.5	7/16-20	17	4.4	6.0	33.0	22.0	35	**4M12F8OMXS**	**4M12F8OMXSS**	420	350
8	5/16	M 10×1.0	1/2-20	14	6.0	4.5	30.0	21.5	25	**5M10F8OMXS**	**5M10F8OMXSS**	350	350
8	5/16	M 12×1.5	1/2-20	19	6.0	6.0	33.0	22.0	35	**5M12F8OMXS**	**5M12F8OMXSS**	420	350
8	5/16	M 14×1.5	1/2-20	19	6.0	6.0	34.0	24.0	35	**5M14F8OMXS**	**5M14F8OMXSS**	350	350
10	3/8	M 12×1.5	9/16-18	17	7.5	6.0	34.0	23.0	35	**6M12F8OMXS**	**6M12F8OMXSS**	420	350
10	3/8	M 14×1.5	9/16-18	19	7.5	7.5	34.0	23.0	35	**6M14F8OMXS**	**6M14F8OMXSS**	350	350
10	3/8	M 16×1.5	9/16-18	22	7.5	9.0	35.5	24.0	51	**6M16F8OMXS**	**6M16F8OMXSS**	350	350
10	3/8	M 18×1.5	9/16-18	24	7.5	11.0	36.5	24.0	60	**6M18F8OMXS**	**6M18F8OMXSS**	250	350
12	1/2	M 14×1.5	3/4-16	19	9.9	7.5	36.0	25.0	38	**8M14F8OMXS**	**8M14F8OMXSS**	350	350
12	1/2	M 16×1.5	3/4-16	22	9.9	9.0	38.0	26.5	55	**8M16F8OMXS**	**8M16F8OMXSS**	350	350
12	1/2	M 18×1.5	3/4-16	24	9.9	11.0	39.0	26.5	66	**8M18F8OMXS**	**8M18F8OMXSS**	250	250
12	1/2	M 22×1.5	3/4-16	27	9.9	14.0	41.0	28.0	70	**8M22F8OMXS**	**8M22F8OMXSS**	250	250
14, 15, 16	5/8	M 18×1.5	7/8-14	24	12.3	11.0	43.0	30.5	71	**10M18F8OMXS**	**10M18F8OMXSS**	250	250
14, 15, 16	5/8	M 20×1.5	7/8-14	27	12.3	11.0	44.5	33.0	90	**10M20F8OMXS**	**10M20F8OMXSS**	250	250
14, 15, 16	5/8	M 22×1.5	7/8-14	27	12.3	14.0	43.5	30.5	98	**10M22F8OMXS**	**10M22F8OMXSS**	250	250
18, 20	3/4	M 18×1.5	1 1/16-12	27	15.5	11.0	50.5	38.0	85	**12M18F8OMXS**	**12M18F8OMXSS**	250	250
18, 20	3/4	M 22×1.5	1 1/16-12	27	15.5	14.0	48.0	35.0	104	**12M22F8OMXS**	**12M22F8OMXSS**	250	250
18, 20	3/4	M 26×1.5	1 1/16-12	30	15.5	14.0	44.5	32.5	120	**12M26F8OMXS**	**12M26F8OMXSS**	210	210
18, 20	3/4	M 27×2.0	1 1/16-12	32	15.5	18.0	51.0	35.0	154	**12M27F8OMXS**	**12M27F8OMXSS**	210	210
25	1	M 22×1.5	1 5/16-12	36	21.5	14.0	47.5	34.5	180	**16M22F8OMXS**	**16M22F8OMXSS**	250	250
25	1	M 26×1.5	1 5/16-12	36	21.5	15.5	51.5	34.5	202	**16M26F8OMXS**	**16M26F8OMXSS**	210	210
25	1	M 27×2.0	1 5/16-12	36	21.5	18.0	50.5	34.5	202	**16M27F8OMXS**	**16M27F8OMXSS**	210	210
25	1	M 33×2.0	1 5/16-12	41	21.5	23.0	53.0	37.0	267	**16M33F8OMXS**	**16M33F8OMXSS**	210	210
28, 30, 32	1 1/4	M 42×2.0	1 5/8-12	50	27.5	30.0	55.0	39.0	427	**20M42F8OMXS**	**20M42F8OMXSS**	210	210
35, 38	1 1/2	M 48×2.0	1 7/8-12	55	33.0	36.0	59.5	42.0	545	**24M48F8OMXS**	**24M48F8OMXSS**	140	140

Steel, stainless steel and brass Triple-Lok® parts are delivered with NBR elastomeric seals as standard. For more details on other seal materials see page K92.

Order codes shown are part of our current manufacturing programme.

Imperial and metric parts may vary in hexagon dimensions.

$\frac{\text{PN (bar)}}{10}$ = PN (MPa)

Pressure ratings – PN shown, apply to Steel and Stainless Steel versions of the product.

Do not create drawings from these dimensions, they are subject to change and ISO manufacturing allowances.