F3MX Male stud connector

Triple-Lok® 37° Flare end / Male BSPT thread (ISO 7)

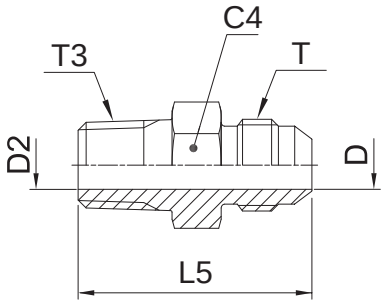

Tube O.D. mm	Tube O.D. in.	Thread BSPT T3	Thread UN/UNF-2A T	C4 mm	D mm	D2 mm	L5 mm	Weight (steel) g/1 piece	Triple-Lok® Steel	Triple-Lok® Stainless Steel	PN (bar) S	PN (bar) SS
6	1/4	1/8-28	7/16-20	13	4.4	4.4	31.0	13	**4F3MXS**	**4F3MXSS**	315	315
6	1/4	1/4-19	7/16-20	14	4.4	4.4	35.5	25	**4-4F3MXS**	**4-4F3MXSS**	315	315
8	5/16	1/8-28	1/2-20	14	6.0	7.0	35.0	17	**5F3MXS**	**5F3MXSS**	315	315
8	5/16	1/4-19	1/2-20	14	6.0	7.0	35.0	24	**5-4F3MXS**	**5-4F3MXSS**	315	315
10	3/8	1/4-19	9/16-18	17	7.5	7.0	35.5	25	**6F3MXS**	**6F3MXSS**	315	315
10	3/8	3/8-19	9/16-18	19	7.5	10.0	35.5	37	**6-6F3MXS**	**6-6F3MXSS**	315	315
10	3/8	1/2-14	9/16-18	22	7.5	13.5	43.0	45	**6-8F3MXS**	**6-8F3MXSS**	315	315
12	1/2	3/8-19	3/4-16	19	9.9	10.0	39.0	43	**8F3MXS**	**8F3MXSS**	315	315
12	1/2	1/4-19	3/4-16	19	9.9	7.0	38.0	41	**8-4F3MXS**	**8-4F3MXSS**	315	315
12	1/2	1/2-14	3/4-16	22	9.9	13.5	45.5	71	**8-8F3MXS**	**8-8F3MXSS**	315	315
14, 15, 16	5/8	1/2-14	7/8-14	24	12.3	13.5	48.0	74	**10F3MXS**	**10F3MXSS**	315	315
14, 15, 16	5/8	3/8-19	7/8-14	24	12.3	10.0	43.0	61	**10-6F3MXS**	**10-6F3MXSS**	315	315
14, 15, 16	5/8	3/4-14	7/8-14	27	12.3	18.0	48.5	117	**10-12F3MXS**	**10-12F3MXSS**	160	160
18, 20	3/4	3/4-14	1 1/16-12	27	15.5	18.0	51.0	119	**12F3MXS**	**12F3MXSS**	160	160
18, 20	3/4	1/2-14	1 1/16-12	27	15.5	13.5	51.0	100	**12-8F3MXS**	**12-8F3MXSS**	315	315
18, 20	3/4	1-11	1 1/16-12	36	15.5	24.0	57.0	214	**12-16F3MXS**	**12-16F3MXSS**	160	160
25	1	1-11	1 5/16-12	36	21.5	24.0	58.5	185	**16F3MXS**	**16F3MXSS**	160	160
25	1	3/4-14	1 5/16-12	36	21.5	18.0	53.5	146	**16-12F3MXS**	**16-12F3MXSS**	160	160
28, 30, 32	1 1/4	1 1/4-11	1 5/8-12	46	27.5	32.0	62.0	309	**20F3MXS**	**20F3MXSS**	160	160
28, 30, 32	1 1/4	1-11	1 5/8-12	46	27.5	24.0	61.5	243	**20-16F3MXS**	**20-16F3MXSS**	160	160
35, 38	1 1/2	1 1/2-11	1 7/8-12	50	33.0	38.0	68.0	421	**24F3MXS**	**24F3MXSS**	160	140
35, 38	1 1/2	1 1/4-11	1 7/8-12	50	33.0	32.0	67.0	352	**24-20F3MXS**	**24-20F3MXSS**	160	140

Order codes shown are part of our current manufacturing programme.

Imperial and metric parts may vary in hexagon dimensions.

$\frac{\text{PN (bar)}}{10} = \text{PN (MPa)}$

Do not create drawings from these dimensions, they are subject to change and ISO manufacturing allowances.