F64OMX Swivel male stud

Triple-Lok® 37° Flare female swivel end /
Male BSPP thread – O-ring + retainer ring (ISO 1179)

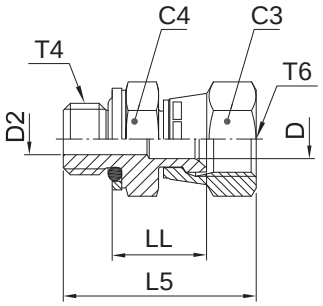

Tube O.D. mm	Tube O.D. in.	Thread BSPP T4	Thread UN/UNF-2B T6	C4 mm	C3 mm	D mm	D2 mm	L5 mm	LL mm	Weight (steel) g/1 piece	Triple-Lok® Steel	Triple-Lok® Stainless Steel	PN (bar) S	PN (bar) SS
6	1/4	1/8-28	7/16-20	17	14	4.4	4.4	32	17.0	30	**4F64OMXS**	**4F64OMXSS**	350	350
6	1/4	1/4-19	7/16-20	19	14	4.4	6.0	34	17.0	30	**4-4F64OMXS**	**4-4F64OMXSS**	350	350
8	5/16	1/8-28	1/2-20	17	17	6.0	4.0	32	17.0	28	**5F64OMXS**	**5F64OMXSS**	350	350
8	5/16	1/4-19	1/2-20	19	17	7.5	6.0	36	18.0	37	**5-4F64OMXS**	**5-4F64OMXSS**	350	350
10	3/8	1/4-19	9/16-18	19	19	7.5	6.0	37	18.0	41	**6F64OMXS**	**6F64OMXSS**	350	350
10	3/8	3/8-19	9/16-18	22	19	7.5	9.0	38	19.0	57	**6-6F64OMXS**	**6-6F64OMXSS**	350	350
12	1/2	3/8-19	3/4-16	22	22	9.9	9.0	41	21.0	62	**8F64OMXS**	**8F64OMXSS**	350	350
12	1/2	1/4-19	3/4-16	19	22	9.9	6.0	43	20.0	57	**8-4F64OMXS**	**8-4F64OMXSS**	350	350
12	1/2	1/2-14	3/4-16	30	22	9.9	14.0	46	23.0	75	**8-8F64OMXS**	**8-8F64OMXSS**	350	350
14, 15, 16	5/8	1/2-14	7/8-14	30	27	12.3	14.0	50	24.5	127	**10F64OMXS**	**10F64OMXSS**	350	350
14, 15, 16	5/8	3/8-19	7/8-14	22	27	12.3	9.0	44	22.5	84	**10-6F64OMXS**	**10-6F64OMXSS**	350	350
18, 20	3/4	3/4-14	1 1/16-12	36	32	15.5	18.0	52	23.5	183	**12F64OMXS**	**12F64OMXSS**	280	280
18, 20	3/4	1/2-14	1 1/16-12	30	32	15.5	14.0	50	21.5	169	**12-8F64OMXS**	**12-8F64OMXSS**	350	350
25	1	1-11	1 5/16-12	46	38	21.5	23.0	59	27.0	296	**16F64OMXS**	**16F64OMXSS**	250	250
25	1	3/4-14	1 5/16-12	36	38	21.5	18.0	54	26.0	253	**16-12F64OMXS**	**16-12F64OMXSS**	250	250
28, 30, 32	1 1/4	1 1/4-11	1 5/8-12	50	50	27.5	30.0	64	32.0	500	**20F64OMXS**	**20F64OMXSS**	250	175
28, 30, 32	1 1/4	1-11	1 5/8-12	46	50	27.5	23.0	63	31.0	420	**20-16F64OMXS**	**20-16F64OMXSS**	250	175
35, 38	1 1/2	1 1/2-11	1 7/8-12	55	60	33.0	36.0	73	36.0	739	**24F64OMXS**	**24F64OMXSS**	170	140

Steel, stainless steel and brass Triple-Lok® parts are delivered with NBR elastomeric seals as standard. For more details on other seal materials see page K92.

Order codes shown are part of our current manufacturing programme.

Imperial and metric parts may vary in hexagon dimensions.

$\frac{\text{PN (bar)}}{10} = \text{PN (MPa)}$

Do not create drawings from these dimensions, they are subject to change and ISO manufacturing allowances.