F63MX Swivel male stud

Triple-Lok® 37° Flare female swivel end / Male BSPT thread (ISO 7)

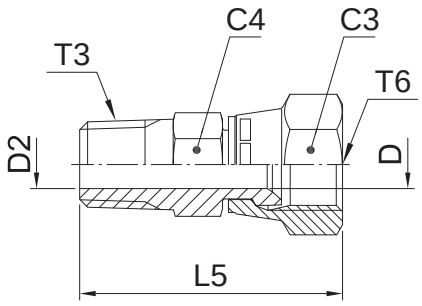

Tube O.D. mm	Tube O.D. in.	Thread BSPT T3	Thread UN/UNF-2B T6	C4 mm	C3 mm	D mm	D2 mm	L5 mm	Weight (steel) g/1 piece	Triple-Lok® Steel	Triple-Lok® Stainless Steel	PN (bar) S	PN (bar) SS
6	1/4	1/8-28	7/16-20	13	14	4.4	5.0	33	18	**4F63MXS**	**4F63MXSS**	315	315
6	1/4	1/4-19	7/16-20	14	14	4.4	7.0	38	19	**4-4F63MXS**	**4-4F63MXSS**	315	315
8	5/16	1/4-19	1/2-20	14	17	6.0	7.0	40	37	**5-4F63MXS**	**5-4F63MXSS**	315	315
10	3/8	1/4-19	9/16-18	14	19	7.5	7.0	41	30	**6F63MXS**	**6F63MXSS**	315	315
10	3/8	3/8-19	9/16-18	19	19	7.5	10.0	41	48	**6-6F63MXS**	**6-6F63MXSS**	315	315
12	1/2	3/8-19	3/4-16	19	22	9.9	9.9	44	50	**8F63MXS**	**8F63MXSS**	315	315
12	1/2	1/4-19	3/4-16	19	22	9.9	7.0	44	46	**8-4F63MXS**	**8-4F63MXSS**	315	315
14, 15, 16	5/8	1/2-14	7/8-14	22	27	12.3	13.5	53	75	**10F63MXS**	**10F63MXSS**	315	315
14, 15, 16	5/8	3/8-19	7/8-14	22	27	12.3	10.0	48	67	**10-6F63MXS**	**10-6F63MXSS**	315	315
18, 20	3/4	3/4-14	1 1/16-12	30	32	15.5	18.0	56	125	**12F63MXS**	**12F63MXSS**	160	160
18, 20	3/4	1/2-14	1 1/16-12	27	32	15.5	13.5	56	120	**12-8F63MXS**	**12-8F63MXSS**	315	315
25	1	1-11	1 5/16-12	36	38	21.5	24.0	64	204	**16F63MXS**	**16F63MXSS**	160	160
25	1	3/4-14	1 5/16-12	32	38	21.5	18.0	59	165	**16-12F63MXS**	**16-12F63MXSS**	160	160
28, 30, 32	1 1/4	1 1/4-11	1 5/8-12	46	50	27.5	32.0	70	496	**20F63MXS**	**20F63MXSS**	160	160

Order codes shown are part of our current manufacturing programme.

Imperial and metric parts may vary in hexagon dimensions.

$\frac{\text{PN (bar)}}{10} = \text{PN (MPa)}$

Do not create drawings from these dimensions, they are subject to change and ISO manufacturing allowances.