C87OMX Male stud elbow

Triple-Lok® 37° Flare end /
Adjustable metric thread – O-ring (ISO 6149)

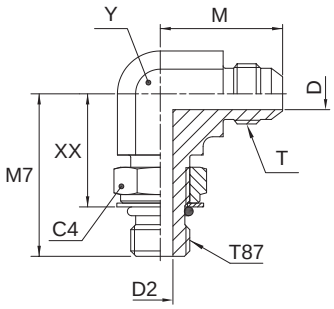

Tube O.D. mm	Tube O.D. in.	Thread Metric T87	Thread UN/UNF-2A T	C4 mm	D mm	D2 mm	M mm	M7 mm	XX mm	Y mm	Weight (steel) g/1 piece	Triple-Lok® Steel	Triple-Lok® Stainless Steel	PN (bar) S	PN (bar) SS
6	1/4	M 10×1.0	7/16-20	14	4.4	4.5	23	27	19	11	17	**4M10C87OMXS**	**4M10C87OMXSS**	420	350
6	1/4	M 12×1.5	7/16-20	17	4.4	6.0	24	31	19	13	20	**4M12C87OMXS**	**4M12C87OMXSS**	420	350
8	5/16	M 10×1.0	1/2-20	14	6.0	4.5	24	26	17	13	22	**5M10C87OMXS**	**5M10C87OMXSS**	420	350
8	5/16	M 12×1.5	1/2-20	17	6.0	6.0	24	31	19	13	25	**5M12C87OMXS**	**5M12C87OMXSS**	420	350
10	3/8	M 14×1.5	9/16-18	19	7.5	7.5	27	34	22	14	31	**6M14C87OMXS**	**6M14C87OMXSS**	420	350
10	3/8	M 16×1.5	9/16-18	22	7.5	9.0	29	38	26	19	55	**6M16C87OMXS**	**6M16C87OMXSS**	350	350
10	3/8	M 16×1.5	3/4-16	22	9.9	9.0	32	38	26	19	65	**8M16C87OMXS**	**8M16C87OMXSS**	350	350
12	1/2	M 18×1.5	3/4-16	24	9.9	11.0	32	38	25	19	66	**8M18C87OMXS**	**8M18C87OMXSS**	350	350
14, 15, 16	5/8	M 18×1.5	7/8-14	24	12.3	11.0	37	42	29	22	99	**10M18C87OMXS**	**10M18C87OMXSS**	350	350
14, 15, 16	5/8	M 22×1.5	7/8-14	27	12.3	14.0	37	43	29	22	99	**10M22C87OMXS**	**10M22C87OMXSS**	350	350
18, 20	3/4	M 22×1.5	1 1/16-12	27	15.5	14.0	42	45	32	27	164	**12M22C87OMXS**	**12M22C87OMXSS**	350	350
18, 20	3/4	M 27×2.0	1 1/16-12	32	15.5	18.0	42	51	35	27	173	**12M27C87OMXS**	**12M27C87OMXSS**	350	350
25	1	M 27×2.0	1 5/16-12	32	21.5	18.0	46	53	37	33	287	**16M27C87OMXS**	**16M27C87OMXSS**	280	280
25	1	M 33×2.0	1 5/16-12	41	21.5	23.0	46	53	37	33	287	**16M33C87OMXS**	**16M33C87OMXSS**	280	280
28, 30, 32	1 1/4	M 42×2.0	1 5/8-12	50	27.5	30.0	52	58	42	41	575	**20M42C87OMXS**	**20M42C87OMXSS**	210	210
35, 38	1 1/2	M 48×2.0	1 7/8-12	55	33.0	36.0	59	64	46	48	874	**24M48C87OMXS**	**24M48C87OMXSS**	140	140

Steel, stainless steel and brass Triple-Lok® parts are delivered with NBR elastomeric seals as standard. For more details on other seal materials see page K92.

Order codes shown are part of our current manufacturing programme.

Imperial and metric parts may vary in hexagon dimensions.

$\frac{\text{PN (bar)}}{10} = \text{PN (MPa)}$

Do not create drawings from these dimensions, they are subject to change and ISO manufacturing allowances.