CMTX Male stud elbow

Triple-Lok® 37° Flare end / Male NPTF* thread (SAE 476)
SAE 070202 MS51504
*Stainless Steel = NPT to prevent galling

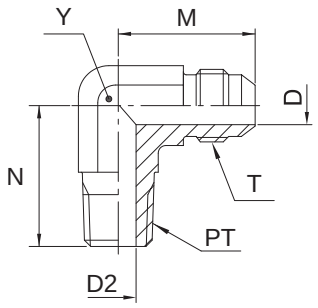

Tube O.D. mm	Tube O.D. in.	Thread NPT/NPTF PT	Thread UN/UNF-2A T	D mm	D2 mm	M mm	N mm	Y mm	Weight (steel) g/1 piece	Triple-Lok® Steel	Triple-Lok® Stainless Steel	PN (bar) S	PN (bar) SS
	1/8	1/8-27	5/16-24	1.6	4.8	20	18	11.0	12	**2 CTX-S**		420	—
	3/16	1/8-27	3/8-24	3.2	4.8	21	18	11.0	15	**3 CTX-S**		420	—
6	1/4	1/8-27	7/16-20	4.4	5.0	23	20	11.0	23	**4CMTXS**	**4CMTXSS**	420	350
6	1/4	1/4-18	7/16-20	4.4	7.0	27	28	14.0	42	**4-4 CTX-S**	**4-4CMTXSS**	420	350
6	1/4	3/8-18	7/16-20	4.4	10.3	28	31	19.0	26	**4-6 CTX-S**	**4-6CMTXSS**	420	350
6	1/4	1/2-14	7/16-20	4.4	13.5	31	37	22.0	30	**4-8 CTX-S**	**4-8CMTXSS**	420	350
8	5/16	1/8-27	1/2-20	6.0	4.8	24	20	14.0	29	**5 CTX-S**	**5CMTXSS**	420	350
8	5/16	1/4-18	1/2-20	6.0	7.2	27	28	14.0	42	**5-4 CTX-S**	**5-4CMTXSS**	420	350
8	5/16	3/8-18	1/2-20	6.0	10.3	29	31	19.0	45	**5-6 CTX-S**	**5-6CMTXSS**	420	350
10	3/8	1/4-18	9/16-18	7.5	7.0	27	28	14.0	45	**6CMTXS**	**6CMTXSS**	420	350
10	3/8	1/8-27	9/16-18	7.5	4.8	27	23	14.0	55	**6-2 CTX-S**	**6-2CMTXSS**	420	350
10	3/8	3/8-18	9/16-18	7.5	10.0	29	31	19.0	76	**6-6CMTXS**	**6-6CMTXSS**	420	350
10	3/8	1/2-14	9/16-18	7.5	13.5	31	37	22.0	117	**6-8CMTXS**	**6-8CMTXSS**	420	350
12	1/2	3/8-18	3/4-16	9.9	10.0	32	31	19.0	86	**8CMTXS**	**8CMTXSS**	420	350
12	1/2	1/4-18	3/4-16	9.9	7.0	32	31	19.0	82	**8-4CMTXS**	**8-4CMTXSS**	420	350
12	1/2	1/2-14	3/4-16	9.9	13.5	34	37	22.0	125	**8-8CMTXS**	**8-8CMTXSS**	420	350
12	1/2	3/4-14	3/4-16	9.9	18.3	36	40	27.0	190	**8-12 CTX-S**	**8-12CMTXSS**	280	280
14, 15,16	5/8	1/2-14	7/8-14	12.3	13.5	37	37	22.0	129	**10CMTXS**	**10CMTXSS**	350	350
14, 15,16	5/8	3/8-18	7/8-14	12.3	10.3	37	33	22.0	127	**10-6 CTX-S**	**10-6CMTXSS**	350	350
14, 15,16	5/8	3/4-14	7/8-14	12.3	18.0	39	40	27.0	192	**10-12CMTXS**	**10-12CMTXSS**	280	280
18, 20	3/4	3/4-14	1 1/16-12	15.5	18.3	42	40	27.0	198	**12 CTX-S**	**12CMTXSS**	280	280
18, 20	3/4	1/2-14	1 1/16-12	15.5	13.5	42	40	27.0	204	**12-8 CTX-S**	**12-8CMTXSS**	350	350
18, 20	3/4	1-11.5	1 1/16-12	15.5	23.8	45	50	33.0	318	**12-16CMTXS**	**12-16CMTXSS**	210	210
22	7/8	3/4-14	1 3/16-12	18.3	18.3	46	48	33.4	260	**14 CTX-S**	**14CMTXSS**	280	245
25	1	1-11.5	1 5/16-12	21.5	23.8	46	50	33.4	328	**16 CTX-S**	**16CMTXSS**	210	210
25	1	3/4-14	1 5/16-12	21.5	18.3	46	45	33.4	318	**16-12 CTX-S**	**16-12CMTXSS**	280	280
25	1	1 1/4-11.5	1 5/16-12	21.5	31.8	51	61	41.0	477	**16-20 CTX-S**	**16-20CMTXSS**	170	170
28, 30, 32	1 1/4	1 1/4-11.5	1 5/8-12	27.4	31.8	52	61	41.0	549	**20 CTX-S**	**20CMTXSS**	170	170
28, 30, 32	1 1/4	1-11.5	1 5/8-12	27.4	24.0	52	60	41.0	536	**20-16CMTXS**	**20-16CMTXSS**	210	210
28, 30, 32	1 1/4	1 1/2-11.5	1 5/8-12	27.4	38.0	56	67	48.0	630	**20-24 CTX-S**	**20-24CMTXSS**	170	140
35, 38	1 1/2	1 1/2-11.5	1 7/8-12	33.3	38.0	59	67	48.0	747	**24 CTX-S**	**24CMTXSS**	170	140
35, 38	1 1/2	1 1/4-11.5	1 7/8-12	33.3	31.8	59	57	48.0	715	**24-20 CTX-S**	**24-20CMTXSS**	170	140
	2	2-11.5	2 1/2-12	45.2	49.2	78	76	64.0	1644	**32 CTX-S**		140	—
	2	1 1/2-11.5	2 1/2-12	45.2	38.0	78	75	64.0	1450	**32-24 CTX-S**		140	—

Order codes shown are part of our current manufacturing programme.

Imperial and metric parts may vary in hexagon dimensions.

$\frac{\text{PN (bar)}}{10} = \text{PN (MPa)}$

Do not create drawings from these dimensions, they are subject to change and ISO manufacturing allowances.