C3MX Male stud elbow

Triple-Lok® 37° Flare end / Male BSPT thread (ISO 7)

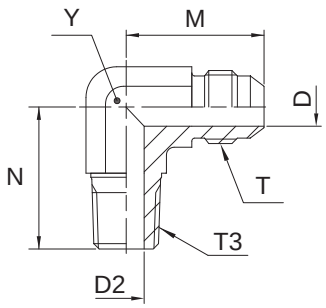

Tube O.D. mm	Tube O.D. in.	Thread BSPT T3	Thread UN/UNF-2A T	D mm	D2 mm	M mm	N mm	Y mm	Weight (steel) g/1 piece	Triple-Lok® Steel	Triple-Lok® Stainless Steel	PN (bar) S	PN (bar) SS
6	1/4	1/8-28	7/16-20	4.4	5.0	23	20	11	23	**4C3MXS**	**4C3MXSS**	315	315
6	1/4	1/4-19	7/16-20	4.4	7.0	27	28	14	42	**4-4C3MXS**	**4-4C3MXSS**	315	315
8	5/16	1/8-28	1/2-20	6.0	5.0	24	20	13	29	**5C3MXS**	**5C3MXSS**	315	315
8	5/16	1/4-19	1/2-20	6.0	7.0	27	28	14	42	**5-4C3MXS**	**5-4C3MXSS**	315	315
10	3/8	1/4-19	9/16-18	7.5	7.0	27	28	14	45	**6C3MXS**	**6C3MXSS**	315	315
10	3/8	3/8-19	9/16-18	7.5	10.0	29	31	19	76	**6-6C3MXS**	**6-6C3MXSS**	315	315
10	3/8	1/2-14	9/16-18	7.5	13.5	31	37	22	117	**6-8C3MXS**	**6-8C3MXSS**	315	315
12	1/2	3/8-19	3/4-16	9.9	10.0	32	31	19	86	**8C3MXS**	**8C3MXSS**	315	315
12	1/2	1/4-19	3/4-16	9.9	7.0	32	31	19	82	**8-4C3MXS**	**8-4C3MXSS**	315	315
12	1/2	1/2-14	3/4-16	9.9	13.5	34	37	22	125	**8-8C3MXS**	**8-8C3MXSS**	315	315
14, 15,16	5/8	1/2-14	7/8-14	12.3	13.5	37	37	22	129	**10C3MXS**	**10C3MXSS**	315	315
14, 15,16	5/8	3/8-19	7/8-14	12.3	10.3	37	33	22	127	**10-6C3MXS**	**10-6C3MXSS**	315	315
14, 15,16	5/8	3/4-14	7/8-14	12.3	18.0	39	40	27	192	**10-12C3MXS**	**10-12C3MXSS**	160	160
18, 20	3/4	3/4-14	1 1/16-12	15.5	18.0	42	40	27	198	**12C3MXS**	**12C3MXSS**	160	160
18, 20	3/4	1/2-14	1 1/16-12	15.5	13.5	42	40	27	204	**12-8C3MXS**	**12-8C3MXSS**	315	315
18, 20	3/4	1-11	1 1/16-12	15.5	24.0	45	50	33	251	**12-16C3MXS**	**12-16C3MXSS**	160	160
25	1	1-11	1 5/16-12	21.5	24.0	46	50	33	328	**16C3MXS**	**16C3MXSS**	160	160
25	1	3/4-14	1 5/16-12	21.5	18.0	46	45	33	318	**16-12C3MXS**	**16-12C3MXSS**	160	160
28, 30, 32	1 1/4	1 1/4-11	1 5/8-12	27.5	32.0	52	61	41	549	**20C3MXS**	**20C3MXSS**	160	160
28, 30, 32	1 1/4	1-11	1 5/8-12	27.5	24.0	52	60	41	536	**20-16C3MXS**	**20-16C3MXSS**	160	160
35, 38	1 1/2	1 1/2-11	1 7/8-12	33.0	38.0	59	67	48	747	**24C3MXS**	**24C3MXSS**	160	140

Order codes shown are part of our current manufacturing programme.

Imperial and metric parts may vary in hexagon dimensions.

$\frac{\text{PN (bar)}}{10} = \text{PN (MPa)}$

Do not create drawings from these dimensions, they are subject to change and ISO manufacturing allowances.