V5OMX 45° Male stud elbow

Triple-Lok® 37° Flare end / Male UNF thread O-ring (ISO 11926)
SAE 070320 MS51528

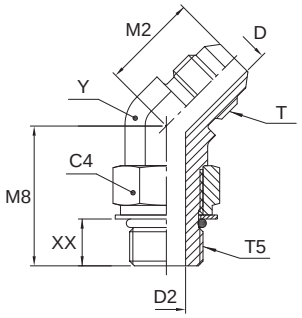

Tube O.D. mm	Tube O.D. in.	Thread UN/UNF-2A T5	Thread UN/UNF-2A T	C4 mm	D mm	D2 mm	M2 mm	M8 mm	XX mm	Y mm	Weight (steel) g/1 piece	Triple-Lok® Steel	Triple-Lok® Stainless Steel	PN (bar) S	PN (bar) SS
6	1/4	7/16-20	7/16-20	14.3	4.4	4.4	18	27	16	11.0	34	**4 V5OX-S**	**4 V5OX-SS**	420	350
8	5/16	1/2-20	1/2-20	16.0	6.0	6.0	20	27	16	14.0	42	**5 V5OX-S**	**5 V5OX-SS**	420	350
10	3/8	9/16-18	9/16-18	17.0	7.5	7.5	21	29	17	14.0	52	**6V5OMXS**	**6 V5OX-SS**	420	350
10	3/8	3/4-16	9/16-18	22.2	7.5	9.9	22	23	19	19.0	104	**6-8 V5OX-S**	**6-8 V5OX-SS**	420	350
12	1/2	3/4-16	3/4-16	22.2	9.9	9.9	25	33	19	19.0	104	**8 V5OX-S**	**8 V5OX-SS**	420	350
12	1/2	9/16-18	3/4-16	17.5	9.9	7.5	25	28	16	19.0	98	**8-6 V5OX-S**	**8-6 V5OX-SS**	420	350
12	1/2	7/8-14	3/4-16	25.4	9.9	12.3	25	39	23	22.0	148	**8-10 V5OX-S**	**8-10 V5OX-SS**	350	350
14, 15,16	5/8	7/8-14	7/8-14	25.4	12.3	12.3	28	39	23	22.0	157	**10 V5OX-S**	**10 V5OX-SS**	350	350
14, 15,16	5/8	3/4-16	7/8-14	22.2	12.3	9.9	28	35	21	22.0	157	**10-8 V5OX-S**	**10-8 V5OX-SS**	350	350
18, 20	3/4	1 1/16-12	1 1/16-12	31.8	15.5	15.5	33	44	26	27.0	258	**12 V5OX-S**	**12 V5OX-SS**	350	350
18, 20	3/4	7/8-14	1 1/16-12	25.4	15.5	12.5	33	40	25	27.0	227	**12-10 V5OX-S**	**12-10 V5OX-SS**	350	350
22	7/8	1 3/16-12	1 3/16-12	35.0	18.3	18.3	37	47	30	33.3	275	**14 V5OX-S**		280	—
25	1	1 5/16-12	1 5/16-12	38.0	21.4	21.4	37	47	30	33.3	375	**16 V5OX-S**	**16 V5OX-SS**	280	280
25	1	1 1/16-12	1 5/16-12	31.8	21.4	15.5	37	47	31	33.3	277	**16-12 V5OX-S**		280	280
28, 30, 32	1 1/4	1 5/8-12	1 5/8-12	47.6	27.4	27.4	40	49	31	41.0	570	**20 V5OX-S**	**20 V5OX-SS**	280	210
35, 38	1 1/2	1 7/8-12	1 7/8-12	54.0	33.3	33.3	45	49	31	47.6	706	**24 V5OX-S**	**24 V5OX-SS**	210	140

Steel, stainless steel and brass Triple-Lok® parts are delivered with NBR elastomeric seals as standard. For more details on other seal materials see page K92.

Order codes shown are part of our current manufacturing programme.

Imperial and metric parts may vary in hexagon dimensions.

$$\frac{\text{PN (bar)}}{10} = \text{PN (MPa)}$$

Do not create drawings from these dimensions, they are subject to change and ISO manufacturing allowances.

K