V4OMX 45° Male stud elbow

Triple-Lok® 37° Flare end / Male BSPP thread O-ring + retaining ring (ISO 1179)

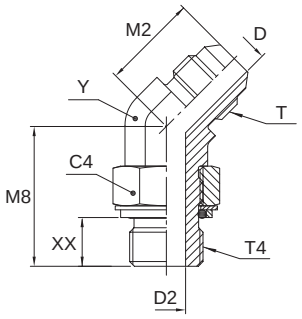

Tube O.D. mm	Tube O.D. in.	Thread BSPP T4	Thread UN/UNF-2A T	C4 mm	D mm	D2 mm	M2 mm	M8 mm	XX mm	Y mm	Weight (steel) g/1 piece	Triple-Lok® Steel	PN (bar)
6	1/4	1/8-28	7/16-20	14	4.4	4.4	18	27	18	11	35	**4V4OMXS**	250
6	1/4	1/4-19	7/16-20	19	4.4	7.5	21	29	18	14	48	**4-4V4OMXS**	250
8	5/16	1/8-28	1/2-20	14	6.0	4.4	20	27	18	13	44	**5V4OMXS**	250
8	5/16	1/4-19	1/2-20	19	6.0	7.5	21	27	15	14	51	**5-4V4OMXS**	250
10	3/8	1/4-19	9/16-18	19	7.5	7.5	21	29	18	14	55	**6V4OMXS**	250
10	3/8	3/8-19	9/16-18	22	7.5	9.9	22	33	22	19	70	**6-6V4OMXS**	250
10	3/8	1/2-14	9/16-18	27	7.5	12.3	22	39	24	22	92	**6-8V4OMXS**	250
12	1/2	3/8-19	3/4-16	22	9.9	9.9	25	33	22	19	104	**8V4OMXS**	250
12	1/2	1/2-14	3/4-16	27	9.9	12.3	25	39	24	22	148	**8-8V4OMXS**	250
14, 15,16	5/8	1/2-14	7/8-14	27	12.3	12.3	28	39	24	22	165	**10V4OMXS**	250
14, 15,16	5/8	3/4-14	7/8-14	36	12.3	15.5	30	44	29	27	235	**10-12V4OMXS**	250
18, 20	3/4	3/4-14	1 1/16-12	36	15.5	15.5	33	44	30	27	270	**12V4OMXS**	250
25	1	1-11	1 5/16-12	41	21.5	21.5	37	47	31	33	394	**16V4OMXS**	250
28, 30, 32	1 1/4	1 1/4-11	1 5/8-12	50	27.5	27.5	40	48	32	41	599	**20V4OMXS**	210
35, 38	1 1/2	1 1/2-11	1 7/8-12	55	33.0	33.0	45	48	33	48	750	**24V4OMXS**	140

Steel, stainless steel and brass Triple-Lok® parts are delivered with NBR elastomeric seals as standard. For more details on other seal materials see page K92.

Order codes shown are part of our current manufacturing programme.

Imperial and metric parts may vary in hexagon dimensions.

$\frac{\text{PN (bar)}}{10} = \text{PN (MPa)}$

Do not create drawings from these dimensions, they are subject to change and ISO manufacturing allowances.