S8OMX Male stud branch tee

Triple-Lok® 37° Flare ends / Male metric thread – O-ring + retaining ring

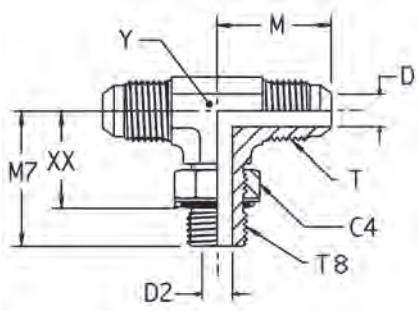

Tube O.D. mm	Tube O.D. in.	Thread Metric T8	Thread UN/UNF-2A T	C4 mm	D mm	D2 mm	M mm	M7 mm	XX mm	Y mm	Weight (steel) g/1 piece	Triple-Lok® Steel	PN (bar)
6	1/4	M 10×1.0	7/16-20	14	4.4	4.5	23	27	18	11	27	**4M10S8OMXS**	250
8	5/16	M 12×1.5	1/2-20	17	6.0	6.0	24	31	19	13	42	**5M12S8OMXS**	250
10	3/8	M 14×1.5	9/16-18	17	7.5	7.5	27	34	22	14	53	**6M14S8OMXS**	250
12	1/2	M 16×1.5	3/4-16	19	9.9	9.0	32	38	26	19	95	**8M16S8OMXS**	250
12	1/2	M 18×1.5	3/4-16	22	9.9	11.0	32	38	26	19	114	**8M18S8OMXS**	250
14, 15,16	5/8	M 22×1.5	7/8-14	27	12.3	14.0	37	43	30	22	175	**10M22S8OMXS**	250
18, 20	3/4	M 27×2.0	1 1/16-12	32	15.5	18.0	42	51	35	27	304	**12M27S8OMXS**	175
25	1	M 33×2.0	1 5/16-12	38	21.5	23.0	46	53	37	33	491	**16M33S8OMXS**	140

Steel, stainless steel and brass Triple-Lok® parts are delivered with NBR elastomeric seals as standard. For more details on other seal materials see page K92.

Order codes shown are part of our current manufacturing programme.

Imperial and metric parts may vary in hexagon dimensions.

$\frac{\text{PN (bar)}}{10} = \text{PN (MPa)}$

Do not create drawings from these dimensions, they are subject to change and ISO manufacturing allowances.

K