R87OMX Male stud run tee

Triple-Lok® 37° Flare ends / Male metric thread – O-ring (ISO 6149)

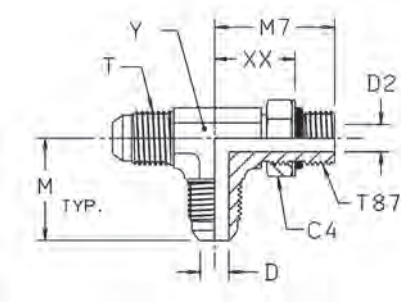

Tube O.D. mm	Tube O.D. in.	Thread Metric T87	Thread UN/UNF-2A T	C4 mm	D mm	D2 mm	M mm	M7 mm	XX mm	Y mm	Weight (steel) g/1 piece	Triple-Lok® Steel	PN (bar)
6	1/4	M 10×1.0	7/16-20	14	4.4	4.5	23	27	18	11	27	**4M10R87OMXS**	420
10	3/8	M 14×1.5	9/16-18	19	7.5	7.5	27	34	22	14	53	**6M14R87OMXS**	420
12	1/2	M 16×1.5	3/4-16	22	9.9	9.0	32	38	26	19	113	**8M16R87OMXS**	350
12	1/2	M 18×1.5	3/4-16	24	9.9	11.0	32	38	26	19	114	**8M18R87OMXS**	350
14, 15,16	5/8	M 18×1.5	7/8-14	24	12.3	11.0	37	42	29	22	174	**10M18R87OMXS**	350
14, 15,16	5/8	M 22×1.5	7/8-14	27	12.3	14.0	37	43	29	22	175	**10M22R87OMXS**	350
18, 20	3/4	M 27×2.0	1 1/16-12	32	15.5	18.0	42	51	35	27	315	**12M27R87OMXS**	350
25	1	M 33×2.0	1 5/16-12	41	22.5	23.0	46	53	38	33	495	**16M33R87OMXS**	280

Steel, stainless steel and brass Triple-Lok® parts are delivered with NBR elastomeric seals as standard. For more details on other seal materials see page K92.

Order codes shown are part of our current manufacturing programme.

Imperial and metric parts may vary in hexagon dimensions.

$\frac{\text{PN (bar)}}{10} = \text{PN (MPa)}$

Do not create drawings from these dimensions, they are subject to change and ISO manufacturing allowances.