WGMTX Female bulkhead connector

Triple-Lok® 37° Flare end / Female NPTF* thread (SAE J476)
*Stainless Steel = NPT to prevent galling

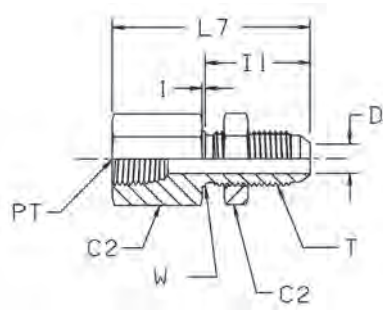

Tube O.D. mm	Tube O.D. in.	Thread NPT/NPTF PT	Thread UN/UNF-2A T	C2 mm	D mm	I1 mm	L7 mm	W mm	Weight (steel) g/1 piece	Triple-Lok® Steel	Triple-Lok® Stainless Steel	PN (bar) S	PN (bar) SS
6	1/4	1/8-27	7/16-20	17.5	4.4	31	47	11	42	**4 WGTX-WLN-S**	**4WGMTXWLNMSS**	420	350
6	1/4	1/4-18	7/16-20	19.0	4.4	31	54	11	62	**4-4 WGTX-WLN-S**	**4-4WGMTXWLNMSS**	420	350
10	3/8	1/4-18	9/16-18	20.6	7.5	33	54	14	72	**6 WGTX-WLN-S**	**6WGMTXWLNMSS**	420	350
12	1/2	3/8-18	3/4-16	25.4	9.9	37	59	19	117	**8 WGTX-WLN-S**	**8WGMTXWLNMSS**	420	350
14, 15,16	5/8	1/2-14	7/8-14	28.6	12.3	41	69	22	179	**10 WGTX-WLN-S**	**10WGMTXWLNMSS**	350	350
18, 20	3/4	3/4-14	1 1/16-12	35.0	15.5	45	75	27	284	**12 WGTX-WLN-S**	**12WGMTXWLNMSS**	280	280
25	1	1-11.5	1 5/16-12	41.3	21.4	45	81	33	415	**16 WGTX-WLN-S**	**16WGMTXWLNMSS**	210	210

Order codes shown are part of our current manufacturing programme.

Imperial and metric parts may vary in hexagon dimensions.

For the version without the locknut remove “WLNM” (e.g. 10 WGTX)

$\frac{\text{PN (bar)}}{10}$ = PN (MPa)

Do not create drawings from these dimensions, they are subject to change and ISO manufacturing allowances.

Maximum bulkhead wallthickness

Size	Tube O.D. inch	Tube O.D. metric	Straight bulkhead union Max. thickness mm	Shape bulkhead union Max. thickness mm
4	1/4	6	8.4	5.3
5	5/16	8	8.4	5.3
6	3/8	10	10.7	7.1
8	1/2	12	11.2	8.4
10	5/8	14–16	10.9	8.1
12	3/4	18–20	11.2	8.6
14	7/8		10.4	7.9
16	1	22–25	9.9	7.4
20	1 1/4	28–32	10.2	7.4
24	1 1/2	35–38	7.1	—
32	2		7.1	—