WAS Weld elbow

Butt weld / EO 24° cone end

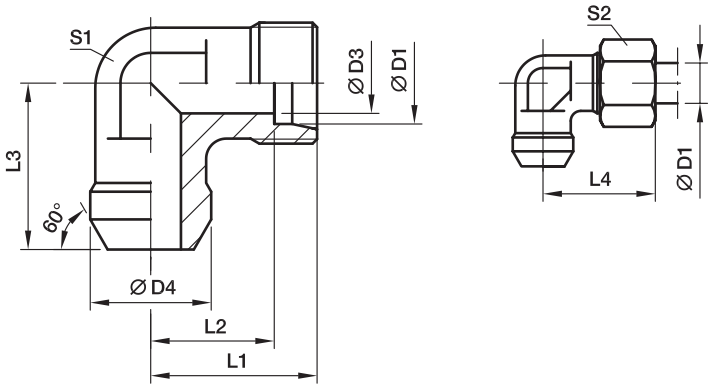

Series	D1	D3	D4	L1	L2	L3	L4	S1	S2	Weight g/1 piece	Order code	PN (bar)[1] Steel	PN (bar)[1] Stainless Steel
L[3]	06	4	10	19	12.0	19	27	12	14	20	**WAS06L**	315	315
	08	6	12	21	14.0	23	29	12	17	25	**WAS08L**	315	315
	10	8	14	22	15.0	24	30	14	19	34	**WAS10L**	315	315
	12	10	16	24	17.0	25	32	17	22	45	**WAS12L**	315	315
	15	12	19	28	21.0	30	36	19	27	81	**WAS15L**	315	315
	18	15	22	31	23.5	33	40	24	32	113	**WAS18L**	315	315
	22	19	27	35	27.5	37	44	27	36	151	**WAS22L**	160	160
	28	24	32	38	30.5	42	47	36	41	271	**WAS28L**	160	160
	35	30	40	45	34.5	49	56	41	50	113	**WAS35L**	160	160
	42	36	46	51	40.0	57	63	50	60	420	**WAS42L**	160	160
S[4]	06	4	11	23	16.0	23	31	12	17	31	**WAS06S**	630	630
	08	5	13	24	17.0	24	32	14	19	44	**WAS08S**	630	630
	10	7	15	25	17.5	25	34	17	22	59	**WAS10S**	630	630
	12	8	17	29	21.5	29	38	17	24	78	**WAS12S**	630	630
	16	12	21	33	24.5	33	43	24	30	133	**WAS16S**	400	400
	20	16	26	37	26.5	37	48	27	36	192	**WAS20S**	400	400
	25	20	31	42	30.0	42	54	36	46	351	**WAS25S**	400	400
	30	25	36	49	35.5	49	62	41	50	525	**WAS30S**	400	400
	38	32	44	57	41.0	57	72	50	60	785	**WAS38S**	315	315

[1] Pressure shown = item deliverable

[3] L = light series; [4] S = heavy series

$\frac{\text{PN (bar)}}{10}$ = PN (MPa)

Delivery without nut and ring. Information on ordering complete fittings or alternative sealing materials see page I7.

*Please add the **suffixes** below according to the material/ surface required.

Order code suffixes		
Material	Suffix surface and material	Example
Steel		WAS16SX
Stainless Steel	71X	WAS16S71X