TABLE OF CONTENTS

VISUAL INDEX

Triple-Lok

Parker Triple-Lok fittings meet the strict requirements of SAE J514 and ISO 8434-2 industry standards for 37° flare fittings. Its design is simple. It uses an easily produced flare at the tube end to seal and hold fluid under high pressure. The fitting consists of three pieces: the body, sleeve and nut. The tube is flared at a 37° angle (74° included angle) and held between the fitting nose (seat) and the sleeve (support) with the nut as shown in Fig. B1, providing a very effective seal between the fitting nose and the tube flare.

The design of Triple-Lok fittings is very efficient. The fitting incorporates the smallest seal area of all fitting types. This seal area, as seen in Fig. B1, is only slightly larger than the fluid flow area. The small seal area results in a compact design, low assembly torque, and a relatively high-pressure capability.

How Triple-Lok Fittings Work

Tightening of the nut clamps the tube flare between the body nose (seat) producing a leak tight connection. This clamping on the 37° taper provides a measure of elasticity to the joint helping it to resist loosening under vibration. The clamping force results in a small radial load that tends to deform the fitting nose radially. The resistance of the nose to elastic deformation provides a constant preload (similar to a lockwasher) keeping it tight.

The clamping force provided by the nut resists the opposing force of the fluid under pressure. The joint remains leak tight as long as the clamping force is higher than the opposing pressure load. Properly assembled Triple-Lok fittings with appropriate tube will seal consistently under pressure until tube bursts.

Sealing in Triple-Lok fittings takes place between two smooth metal surfaces, the fitting nose and inside of the tube flare. Therefore, the sealing surfaces have to be smooth, free of any nicks, scratches, spiral tool marks, splits or weld beads. Seamless or welded and drawn fully annealed tube is recommended for Triple-Lok fittings for ease in flaring and bending. Certain types of harder tubes that are not fully annealed may not be suitable for flaring due to the potential for immediate or long-term cracking of the tube flare. For specific tube type and wall thickness recommendations, please see Table S11 and S14 in the General Technical Section.

International Acceptance

The versatility of 37° flare fittings is a primary reason for its worldwide acceptance. To illustrate the versatility of Triple-Lok, refer to Fig. B2. The Triple-Lok adapter is attachable to either inch tube, metric tube, or a hose assembly. To adapt to metric tube, simply change the sleeve (using the standard inch adapter and nut). Please see Table S29 in the General Technical Section for a clear illustration of every "convertible sleeve" connection for the 37° design. For example, a 25 mm tube would use a standard SAE -16 (1") flare fitting and nut, however, a 25 mm metric sleeve (TXS25) would replace the inch size sleeve.

Triple-Lok fittings are available with many different port options for the various international hydraulic ports available, such as SAE straight thread, NPT/NPTF, BSPP, BSPT and Metric (including ISO 6149).

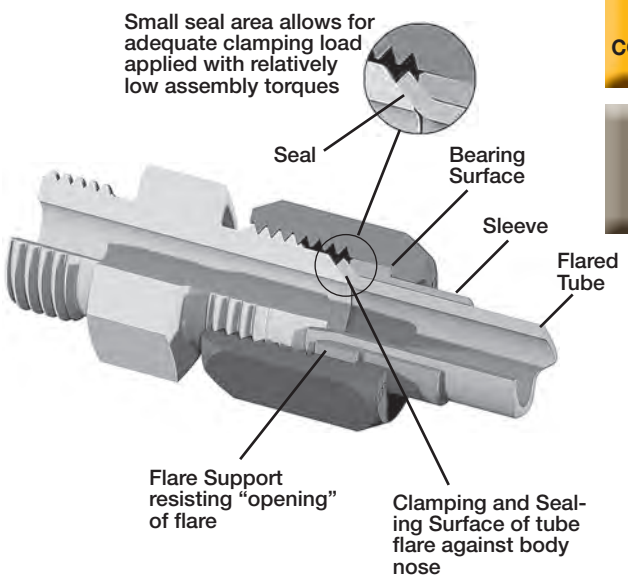

Fig. B1 – Triple-Lok Design and Features

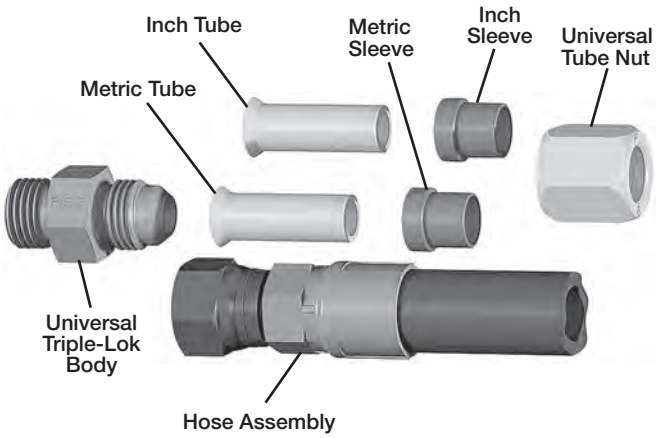

Fig. B2 – Triple-Lok's Adaptability to Inch Tube, Metric Tube, or Hose Assemblies

Parker Hannifin Corporation
Tube Fittings Division
Columbus, Ohio
http://www.parker.com/tfd