E Tube/hose insert

for plastic tubing

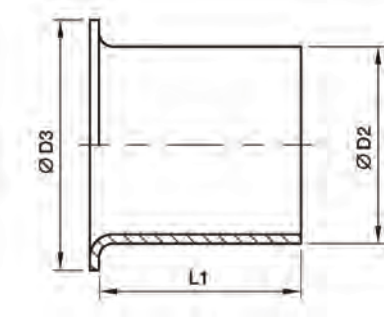

Tube O.D.	Tube I.D.	D2	D3	L1	Weight g/1 piece	Order code Brass
04	2.0	2.0	3.5	8	1	**E04/02X**
04	2.5	2.5	4.0	8	1	**E04/2.5X**
05	3.0	3.0	5.0	14	1	**E0506/03X**
06	3.0	3.0	5.0	14	1	**E0506/03X**
05	4.0	4.0	5.0	14	1	**E0506/04X**
06	4.0	4.0	5.0	14	1	**E0506/04X**
08	4.0	4.0	6.6	14	1	**E08/04X**
06	5.0	5.0	6.0	14	1	**E06/05X**
08	5.0	5.0	6.0	14	1	**E08/05X**
10	6.0	6.0	8.0	15	1	**E0810/06X**
08	6.0	6.0	8.0	15	1	**E0810/06X**
10	8.0	8.0	10.0	15	1	**E10/08X**
12	8.0	8.0	12.0	15	2	**E12/08X**
12	9.0	9.0	12.0	15	2	**E12/09X**
12	10.0	10.0	12.0	15	2	**E1215/10X**
15	12.0	12.0	14.8	15	3	**E15/12X**
15	12.5	12.5	14.8	15	3	**E1516/12.5X**
16	12.5	12.5	14.8	15	3	**E1516/12.5X**
18	14.0	14.0	17.8	15	4	**E18/14X**
18	16.0	16.0	17.8	20	4	**E1820/16X**
20	16.0	16.0	17.8	20	4	**E1820/16X**
22	18.0	18.0	21.8	16	5	**E22/18X**