TTP4MX Test point connection

Triple-Lok® 37° Flare female end / EMA3 test point

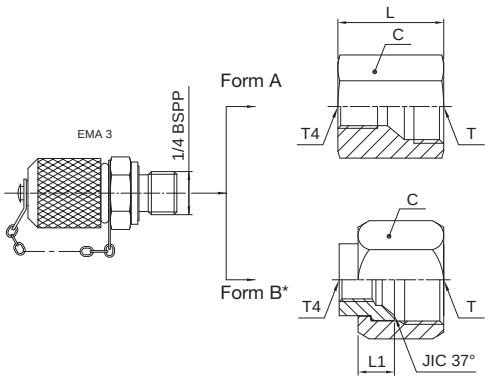

* Form B versions delivered complete with BMTXS nut.

Tube O.D. T mm	Tube O.D. T in.	Thread BSPP T4	Thread UN/UNF-2B T	Form	L mm	L1 mm	C mm	Weight (steel) g/1 piece	Triple-Lok® Steel	PN (bar)
6	1/4	1/4-19	7/16-20	A	29	–	19	132	**4TTP4MXS**	400
8	5/16	1/4-19	1/2-20	A	29	–	19	136	**5TTP4MXS**	400
10	3/8	1/4-19	9/16-18	A	29	–	19	133	**6TTP4MXS**	400
12	1/2	1/4-19	3/4-16	A	32	–	22	152	**8TTP4MXS**	400
14, 15, 16	5/8	1/4-19	7/8-14	A	32	–	27	192	**10TTP4MXS**	350
18, 20	3/4	1/4-19	1 1/16-12	B	–	11	32	132	**12TTP4XS**	350
25	1	1/4-19	1 5/16-12	B	–	12	41	146	**16TTP4XS**	280
28, 30, 32	1 1/4	1/4-19	1 5/8-12	B	–	15	50	188	**20TTP4XS**	280
35, 38	1 1/2	1/4-19	1 7/8-12	B	–	17	60	275	**24TTP4XS**	210

Order codes shown are part of our current manufacturing programme.

Imperial and metric parts may vary in hexagon dimensions.

$\frac{\text{PN (bar)}}{10} = \text{PN (MPa)}$

Do not create drawings from these dimensions, they are subject to change and ISO manufacturing allowances.

K