R6P4MX Test point connector

Male / Female swivel Triple-Lok® 37° flare end / EMA3 test point

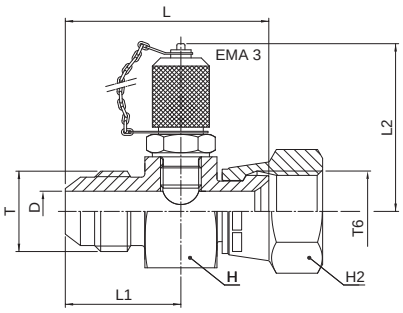

Tube O.D. T mm	Tube O.D. T in.	Thread UN/UNF-2A T	Thread UN/UNF-2B T6	D mm	L mm	L1 mm	L2 mm	H mm	H2 mm	Weight (steel) g/1 piece	Triple-Lok® Steel	PN (bar)
6	1/4	7/16-20	7/16-20	4.4	45	26	54	36	14	270	**4-4R6P4MXS**	500
8	5/16	1/2-20	1/2-20	6.0	46	26	54	36	17	290	**5-4R6P4MXS**	420
10	3/8	9/16-18	9/16-18	7.5	47	26	54	36	19	300	**6-4R6P4MXS**	350
12	1/2	3/4-16	3/4-16	9.9	50	28	54	36	22	308	**8-4R6P4MXS**	350
14, 15, 16	5/8	7/8-14	7/8-14	12.3	54	31	54	36	27	337	**10-4R6P4MXS**	350
18, 20	3/4	1 1/16-12	1 1/16-12	15.5	56	34	54	41	32	416	**12-4R6P4MXS**	350
25	1	1 5/16-12	1 5/16-12	21.4	60	35	54	46	38	506	**16-4R6P4MXS**	250
28, 30, 32	1 1/4	1 5/8-12	1 5/8-12	27.4	64	36	54	50	50	691	**20-4R6P4MXS**	250
35, 38	1 1/2	1 7/8-12	1 7/8-12	33.3	69	39	54	60	60	995	**24-4R6P4MXS**	170

Order codes shown are part of our current manufacturing programme.

Imperial and metric parts may vary in hexagon dimensions.

$\frac{\text{PN (bar)}}{10}$ = PN (MPa)

Do not create drawings from these dimensions, they are subject to change and ISO manufacturing allowances.

K